Ultra-thin Linear MPFA Scale for Industrial Machinery

Mitsubishi Heavy Industries Machine Tool Co., Ltd.
TEL +81-75-861-3313

In recent years, there has been increasing demand for higher-speed and higher-precision control of linear drive mechanisms in various fields, including industrial handling systems, mobile robots, semiconductor/liquid crystal manufacturing systems, and food processing equipment. With such a background, an increasing number of devices have adopted linear motors and precision position detectors instead of conventional servo motors and ball screws.

Mitsubishi Heavy Industries Machine Tool Co., Ltd. has marketed the MP (Mitsubishi Precision) scale, which is a high-speed and high-precision scale that is resistant to harsh environments, mainly for use in machine tools. This time, we have developed the optimal scale for linear motor position detection that can be used by a wider range of customers. This report presents the ultra-thin linear MPFA (Mitsubishi Precision Factory Automation) scale for industrial machinery, which is an achievement of the development.

1. Features of ultra-thin linear scale MPFA

The MPFA scale has various new excellent features, while also inheriting the features of the MP scale marketed for machine tools. The scale component of the MPFA scale has a thickness of 0.4 mm as a tape-type scale, which was reduced from the roughly 10 mm of the MP scale by using a stainless-steel strip as the new base material.

(1) Thin and compact

The MPFA scale has the scale dimensions of 13 mm in depth and 0.4 mm in height, and the head dimensions of 50 mm in width, 21 mm in depth and 12 mm in height. Due to this compactness, a thin scale that fits inside a linear motor stage where the mounting space is limited has been achieved (**Figure 1**).

In spite of its compactness, the MPFA scale has the same high-speed and high-resolution performance as existing products (response speed of 30 m/s and resolution of 0.1 μm).

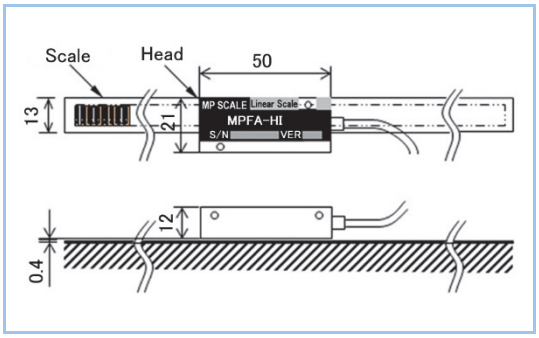

Figure 1 MPFA scale mounting dimensions

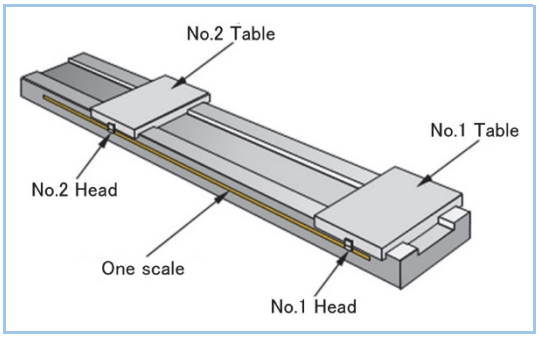

Figure 2 Example of application to multiple-head mechanism

(2) Utilization in various applications

The tape-type MPFA scale can be cut to any length, so a scale with a length suitable for the application, from a long size to a short size, can be made. In addition, multiple-head detection, which allows the use of multiple heads on a single scale, is possible, so it can be used for applications where many products are simultaneously handled, such as food processing equipment (**Figure 2**).

(3) High cost performance

A new manufacturing method that applies the latest printing technology is adopted. The MPFA scale realizes low-price production by pursuing cost reduction in manufacturing.

(4) Easy adjustment

The MPFA scale comes standard with the "MP VIEW" monitoring function, which can display the gap between the scale and the head and the current position numerically just by connecting it to a PC. This makes for easy adjustment during assembly and maintenance (**Figure 3**). In addition, the user can acquire scale information (position information, detailed data on abnormalities, etc.) with a computer, etc., using disclosed protocols.

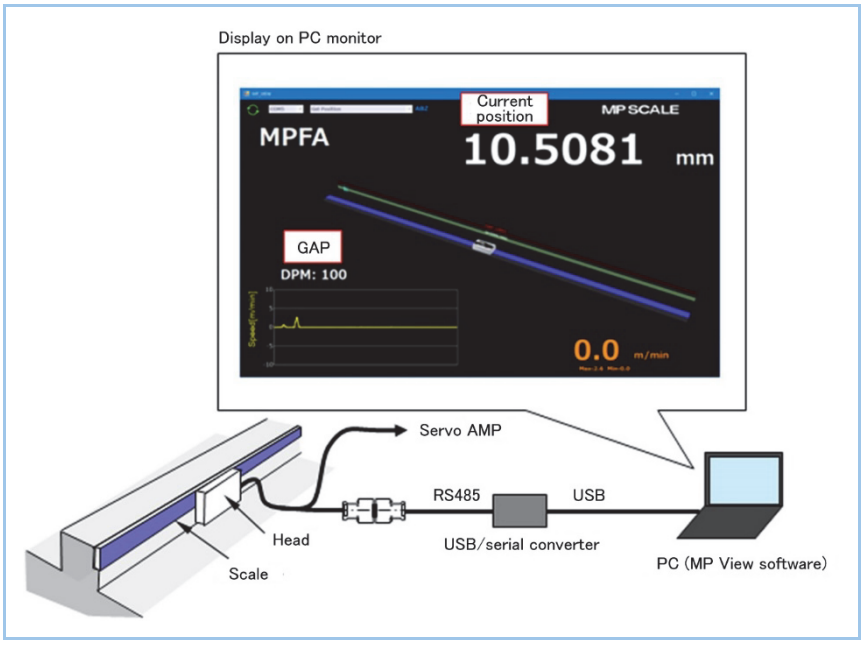

Figure 3 MP VIEW (connection to PC)

(5) Excellent environmental resistance and stable accuracy

Detectors for machine tools must be able to be used in environments where chips and oil are scattered. The MPFA scale uses the same electromagnetic induction method as the MP scale, which has been proven for use in machine tools, so it is a highly-accurate detector that is durable in environments where dust, oil, condensation, etc., exist.

In addition, since there is no deterioration in accuracy due to aging thanks to the completely non-contact structure, accurate position detection can be maintained over the long term.

2. Specifications

Table 1 shows the specifications of the MPFA scale, and **Figure 4** shows an example of mounting to a linear motor stage.

Table 1 Specifications of MPFA scale

Item	Description
Model type	MPFA-HI (head) MPFA-TI (scale)
Type	Incremental
Effective stroke	Up to 9950 mm (Scale length－50 mm)
Structure	Open type
Wiring	One wire on head side
Scale dimensions	13 mm (D)×0.4 mm (H)
Head dimensions	50 mm (W)×21 mm (D)×12 mm (H)
Resolution	1.0 μm, 0.1 μm
Multiple-head mechanism	configurability
Response speed	30 m/s
Interface	Compatible individually with products from servo amplifier manufacturers A/B/Z phase rectangular pulse open interface

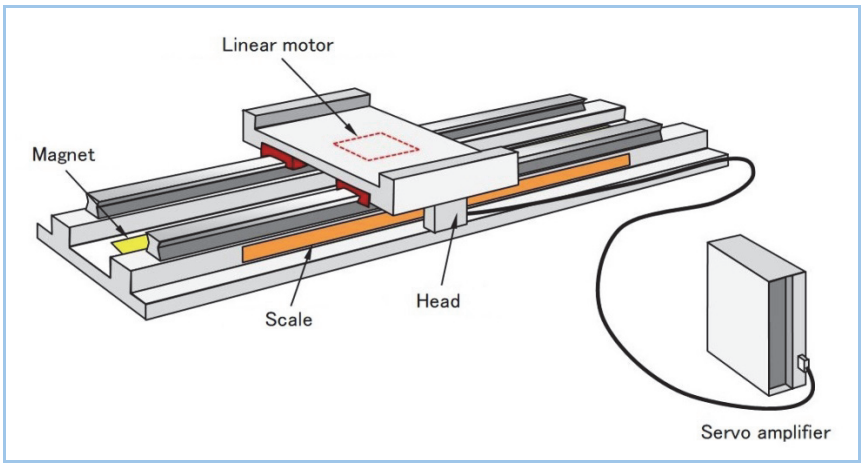

Figure 4 Example of mounting

3. Future prospects

We will continue to work on product improvements such as support for absolute detection and the expansion of interface compatibility with products from various servo amplifier manufacturers in order to provide a wider range of customers with solutions to the problems they are facing.