Combustion Technology of Oil-Fired Combustors for Dual Fuel-Fired Gas Turbines

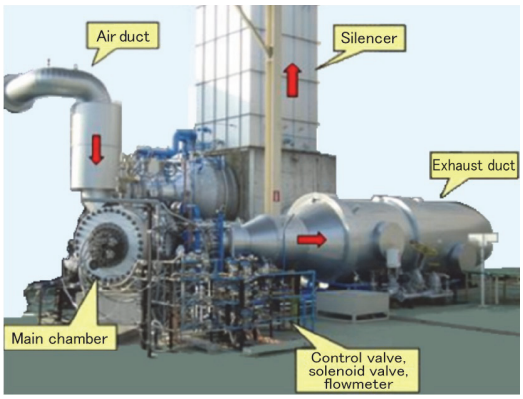

JUNJI NODA*1 KOJI MIYAZAKI*1
KOZO AOKI*1 KAZUAKI HASHIGUCHI*2

With the background of environmental protection and the reduction of CO_2 emissions, high-performance and high-efficiency gas turbine combustors are needed. Particularly, gas turbine combustors (hereafter GT combustors) are required to have the same performance level in both oil-fired and gas-fired operations. Mitsubishi Heavy Industries, Ltd. (MHI) is working on applying CFD analysis to the development of oil fuel nozzles. Additionally, MHI developed a blowdown combustion test rig as a new element test method Even in a short time, combustor screenings in equivalent to actual GT conditions are available with the test rig. Furthermore, MHI has also developed a small fiber fused lens probe and realized the measurement of heat release distribution in an oil-fired combustor.

1. Introduction

GT combustors are in demand for not only gas-firing, but also oil-firing. Dual-fuel GT combustors, for which both oil- and gas-firing are possible, require combustion performances in terms of oil-firing to be the same as in gas-firing.

Combustor wall temperature reductions, combustion stability and the reduction of exhaust gas emissions are important themes for GT combustors. To overcome these issues, it is necessary to estimate complicated phenomena such as fuel atomization, vaporization and mixing with air before combustion. In addition, quick and inexpensive screening of combustor test pieces is required

This paper outlines the following experimental-analytical techniques to solve the aforementioned issues.

(1) Numerical approach for gas-liquid interface tracking
(2) Screening with blowdown type combustion test rig
(3) Small optical fiber probes for heat release ratio measurement in flame

2. Development of GT combustor verification method

(1) Gas-liquid interface tracking analysis of liquid fuel

The fuel nozzle is the key device in determining the combustor performance and a CFD analysis model for gas-liquid interface tracking is being applied to the development of the fuel nozzle.

In this analysis model, the free surface of the liquid column/film near the fuel injector is tracked by the VOF (volume of fluid) method until surface breakup occurs, and the subsequent droplet motion is analyzed using the DPM (discrete phase model) method to cope with both the acceptable accuracy and the moderate calculation cost. To evaluate the atomization and spray distribution of liquid fuel, fuel injection obliquely into a crosswind is analyzed using a VOF to DPM model with a commercial generic code of ANSYS Fluent. **Figure 1** gives an example of the analysis results and indicates that the outer edge of the trajectory in these results match well

*1 Combustion Research Department, Research & Innovation Center
*2 Research Manager, Combustion Research Department, Research & Innovation Center

with the prediction by model equation[1] of Fuller et al. Furthermore, VOF to DPM analysis can also provide information on atomization due to shearing with the air flow and the liquid column breakup length in addition to the spray outer edge. In this way, if the downstream spray distribution can be predicted by applying the CFD analysis method to more complicated nozzle shapes and airflow conditions, the method will be a useful tool for nozzle development.

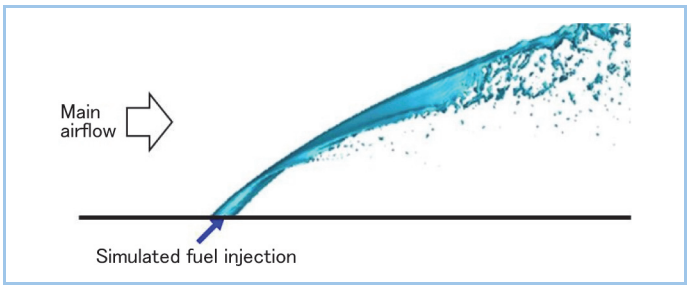

Figure 1 Example of CFD analysis (VOF to DPM model)

(2) Screening with blowdown type combustion test rig

We perform combustion tests to verify the performance of the nozzles developed and selected through the aforementioned CFD analysis and element tests. For combustion tests, it is necessary to match the same representative scale in the target phenomena. For example, it is necessary to match the Reynolds number and Mach number to simulate flow fields, as well as the temperature and the fuel residence time for certain combustion fields. Particularly in the case of oil-fired combustors, injected fuel there are complicated processes involving injected fuel before combustion such as atomization, evaporation and fuel-air mixing before combustion. In the development of GT combustors, it is important to reproduce these phenomena in element tests to evaluate the combustor performances. For this reason, a combustion test rig, which is able to operate under actual combustion conditions with actual scale combustors, is required, rather than a small-scale element test device.

For the actual-scale oil-fired combustion tests, a blowdown type combustion test rig was developed. Batch-type tests are possible by using the mainstream air supplied from an air tank pressurized by a compressor. Although the test time is limited due to the capacity of the air tank, this test rig allows operation under the same pressure and temperature conditions as actual equipment.

In addition, operation using fuel and additive water under conditions equivalent to those of the actual equipment is possible, so tests and measurements in the combustion flow field reproducing those of the actual GT combustor can be performed. This test rig has a high degree of freedom in terms of the air pressure and temperature conditions, as well as the fuel oil and additive water systems, and the installation of a GT combustor is also easy. Thus, the screening of GT combustors can be performed in a short time and at a low cost. **Figure 2** and **Figure 3** depict the external view of this test rig and the schematic diagram, respectively.

Combustion air is supplied from the high pressure air tanks and controlled with valves, and then the air condition is reproduced via an air heater. A first-stage orifice simulating a first-stage stator blade of an actual gas turbine is installed followed by a second-stage orifice to control back pressure. Oil fuel and additive water are supplied to the combustor through a high-pressure pump. Air, fuel and water flow control valves operate under optimized PID control, and the GT combustor rated load condition is reached in just several tens of seconds after ignition and flame holding conditions.

Figure 4 shows time series measurement data in the combustion test using the test rig as an example. The horizontal axis shows the time from the load increase, and the vertical axis shows the mass flow rate, the fuel-air ratio (F/A) and the combustor inlet pressure. This figure indicates that a stable air supply and combustor pressure increase are attained even when the srart-up time is short. After increasing the load, measurements were performed under three F/A conditions and it was confirmed that the parameters followed the change of F/A quickly enough. After the measurements, purge operation was conducted, and the air supply was stopped after the exhaust gas in the test rig were sufficiently purged.

The series of test sequences shown in Figure 4 was conducted by using DIASYS Netmaion®, which is also used in the actual gas turbine facility to control the system. The sequence procedure was input in advance. Only a STOP/GO decision was needed during the test. For this reason, even with a small number of experimental test members, we can conduct the test safely and focus on the status of the test rig and combustors operating under conditions equivalent to the actual GT conditions.

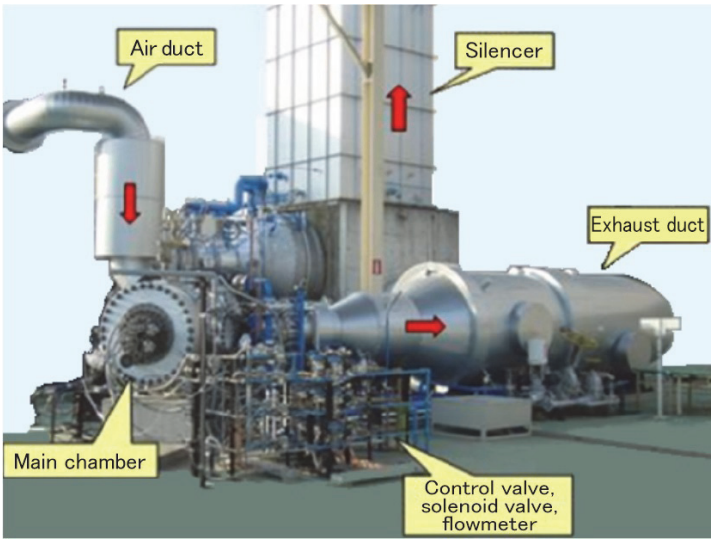

Figure 2 External view of blowdown combustion test rig

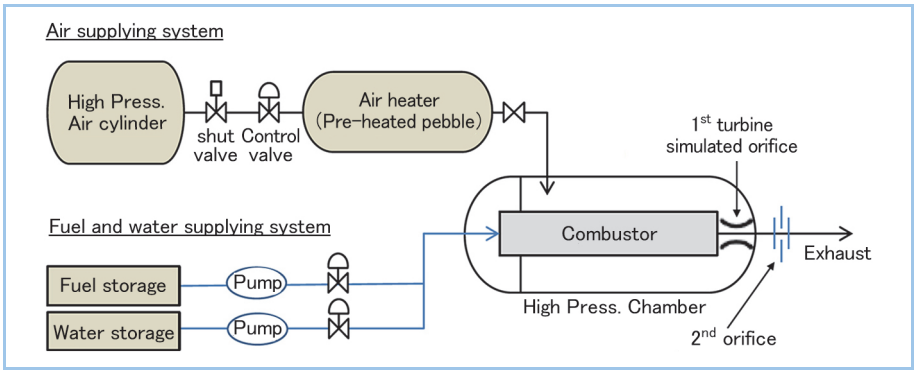

Figure 3 Schematic diagram of blowdown combustion test device[6]

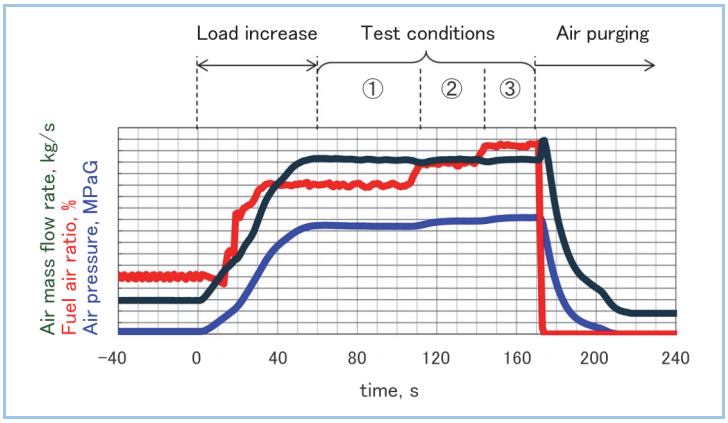

Figure 4 Example of time series data during blowdown test

(3) Flame diagnosis using a small and air-cooled fiber fused lens probe

The blowdown combustion test rig described above is designed to perform various measurements for evaluating and verifying the phenomena inside the combustor. This chapter shows the optical measurement of the heat release rate distribution in a GT combustor.

The heat release rate distribution inside the combustor was evaluated from the ultraviolet (UV) light (mainly consisting of OH* and CO_2* chemiluminescence) measurement of the flame using a newly-developed small and air-cooled fiber fused lens probe. Since a water-cooled

jacket is not required, there is no risk of leakage of cooling water, and the probe can be installed in a combustor with a limited amount of installation space. The measurement system consists of two parts: (1) a small air-cooled fused fusion lens probe and (2) a high-sensitivity UV photodetector. **Figure 5** (a) shows the schematic diagram of the lens probe installed in the combustor and Figure 5 (b) shows that of the high-sensitivity UV photodetector. Six fiber probes were attached to the combustor wall. The light emitted from the flame at each position was collected and focused in an optical fiber, and was led to the outside of the combustor through the optical fiber. The optical fiber outside the combustor was connected to a UV band chemiluminescence detector and the light intensity was measured. It is known that the UV band chemiluminescence from 300 to 340 nm is mainly due to the emission of OH* and CO_2*, and both emission intensities have a positive correlation with the heat release rate in the combustion flame[(2)-(5)].

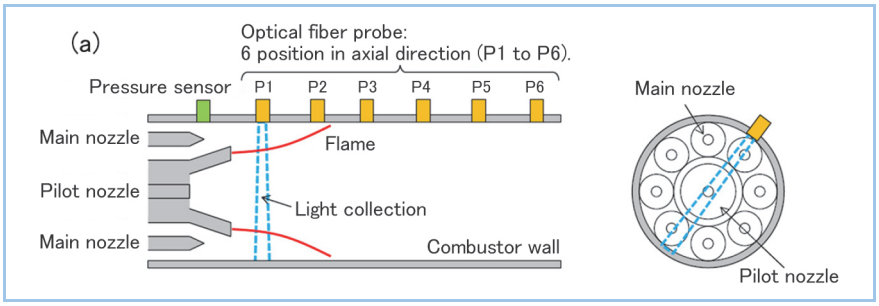

Figure 5(a) Schematic installation of small self-luminous probe in oil-fired combustor[(6)]

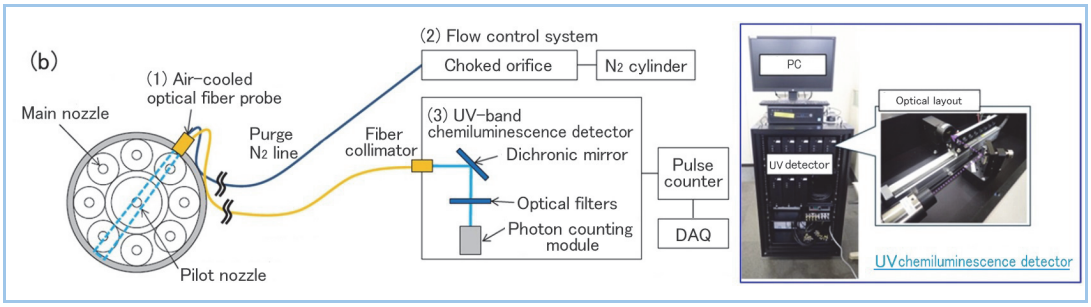

Figure 5(b) Schematic configuration of ultra-sensitive ultraviolet light detector and its connection[(6)]

Figure 6 shows a photograph of a small and air-cooled fiber fused lens probe. The light emitted from the flame was collected by a focusing lens (φ2mm) made of fused silica and focused into an optical fiber, and delivered to the outside of the combustor through an Au-coated optical fiber. Au coating on the optical fiber enhances the heat resistance up to 750°C. The diameter of the focusing lens was reduced to φ2mm to prevent contaminants, such as oil/water spray and soot, from adhering to the surface of the probe.

Since the size of the focusing lens was reduced to φ2 mm, making the light receiving area smaller than that of a conventional probe, and the light receiving intensity was reduced. To compensate for the decrease in received light intensity due to the diameter change, it was necessary to improve the sensitivity of the UV-band chemiluminescence detector. In this study, a single-photon counting method was employed to enhance the sensitivity of UV light detection. The photon counting method effectively separates the thermal noise of the detector from the optical signal and counts photons one by one. It is effective for the measurement of very weak light. Figure 5(b) shows a schematic diagram of an optical setup and photon-counting UV detector. An optical fiber transmitting light inside the combustor was connected to a UV-band chemiluminescence detector. Light emitted from the fiber tip was collimated by a lens, reflected by a dichroic mirror and irradiated to a photon counting module to measure the intensity of UV emission from the flame. The light was passed through a two-band pass filter to block out light other than 300-340 nm, and passed through a UV neutral density filter to adjust the light intensity so that the detector did not saturate the signal.

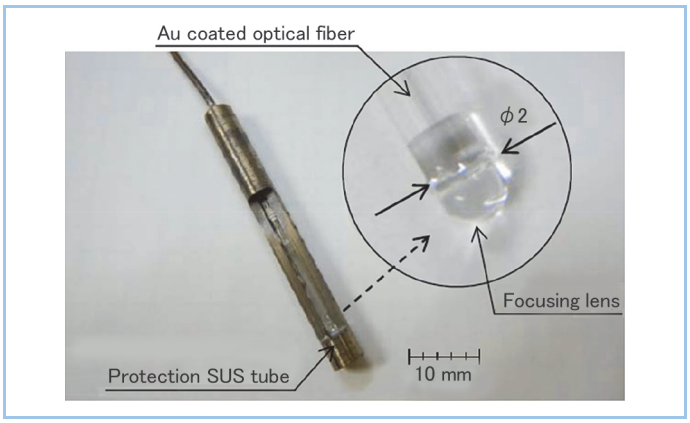

Figure 6 External view of small non-cooled fiber-fused lens probe[6]

3. Experimental results

A full-scale oil-fired combustion test was conducted under the conditions corresponding to an actual combustor by using the blowdown combustion test rig described above. A comparison of heat release rate distributions in gas combustion and in oil combustion is discussed here.

(1) Comparison of heat release rate distribution measured in oil fired combustor and gas fired combustor.

Figure 7 shows a comparison between the axial distribution of heat release rate in gas-fired combustion (blue squares) reported in the previous study by Fukuba et al.[7] and that of heat release rate in oil-fired combustion (red circles) obtained in this study[6]. The heat release rate values are normalized by the maximum value for each condition. A wider distribution of heat release rate was measured in oil combustion than in gas combustion.

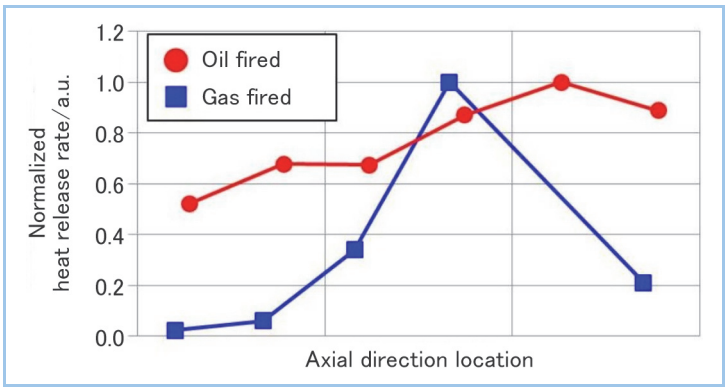

Figure 7 Comparison of heat release rate distribution in GT combustor between oil-firing and gas-firing[6]

(2) Comparison of heat release rate distribution measured under stable and unstable conditions.

Figure 8 shows the heat release rate distribution under stable (closed circles) and unstable (open circles) oil firing conditions. The heat release rate values are normalized by the maximum value for each condition. The heating area moved upstream and the combustion oscillation tended to increase.

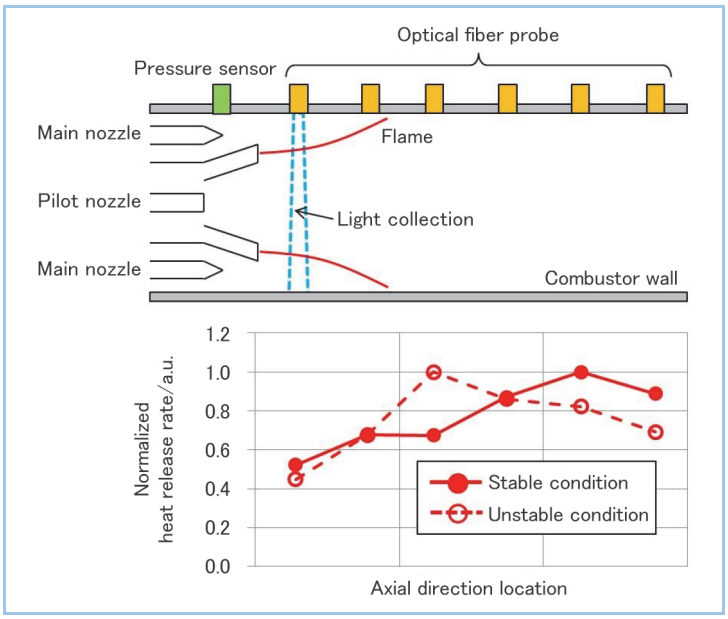

Figure 8 Heat release rate distribution during stable and unstable operation of oil firing[6]

4. Conclusion

For the development of oil-fired gas turbine combustors, recent spray analysis using CFD, blowdown combustion experimental technology, and overcoming the challenge of flame diagnosis using a newly-developed optical fiber probe were reported. In the future, CFD analysis will be conducted to understand the phenomena by refining the combustor model, and the output of the oil-fired combustor will be further increased by improving the combustor itself.

References

(1) Fuller, R. et al., Effects of Injection Angle on the Breakup Processes of Liquid Jet in Subsonic Crossflows, AIAA paper, 97-2966
(2) Tachibana, S., An Experimental Study of Combustion Instability in a Staging Fuel Combustor, Proc. AJCPP (2012), 043
(3) Venkataraman, K. K., Mechanism of Combustion Instability in a Lean Premixed Dump Combustor J. Prop. Power, Vol. 15 No. 6, (1999) p.909-918
(4) Güthe, F., Chemiluminescence as diagnostic tool in the development of gas turbines, Applied Physics B, Vol. 107, Issue 3, (2012) p.619-636
(5) Thomas, F., Radiation from High Pressure Hydro-gen-Oxygen Flames and its Use in Assessing Rocket Combustion Instability, (2015) Ph.D. Thesis
(6) Miyazaki , K. et al., Flame Diagnostics Method for Oil Fired Industrial Gas Turbine Combustors under High Pressure Conditions, IGTC, (2019)
(7) Fukuba, S. et al., EXPERIMENTAL AND NUMERICAL INVESTIGATION OF DLN COMBUSTOR FOR A HEAVY-DUTY GAS TURBINE, Proc. GPPF, (2017) p.1438-1447