Efforts toward Introduction of SOFC-MGT Hybrid System to the Market

KAZUO TOMIDA*1 KIMI KODO*2
DAIGO KOBAYASHI*2 YOSHIKI KATO*2
SHIGENORI SUEMORI*3 YASUTAKA URASHITA*4

Toward a future low-carbon society, the development of the SOFC-MGT hybrid system, in which a Solid Oxide Fuel cell (SOFC) that can generate power with high efficiency and a gas turbine are combined, has been promoted. In a program subsidized by the National Research and Development Agency New Energy and Industrial Technology Development Organization (NEDO) starting in fiscal 2015, 250 kW class demonstration systems were set up at four locations in Japan. The verification of durability and demonstrations of start/stop tests and load change tests under an actual load environment were conducted toward introduction to the market, and stable operation was verified. As a result, the introduction of the 250 kW class system to the market started in 2017. Furthermore, since fiscal 2016, in another NEDO commissioned project, the verification of the 1 MW class system, which features increased capacity, has been conducted, and the demonstration test is currently being conducted at the Nagasaki Works of Mitsubishi Hitachi Power Systems, Ltd. (MHPS).

1. Introduction

Recently, the energy situation in Japan has reached a major turning point, and it seems that awareness of high-efficiency power generation and power security has increased. To strike a balance between CO_2 reduction to mitigate global warming and the stable supply of power, which is indispensable in modern society, it is important to combine an advanced power grids constructed with centralized power sources such as thermal power plants and high-efficiency distributed power sources or new energy sources such as renewable energy in the best mix in terms of both quality and quantity. To preserve global energy resources, it is also a necessary and urgent issue to ensure the effective use of fossil fuel through the development and early adoption of high-efficiency power generation systems. In Japan, the industrial sector accounts for more than 40% of all energy consumption, and the consumer and industrial sectors account for slightly more than 60% combined. It is considered that the spread of the use of fuel cells in the commercial field is one effective measure for improving the Japanese energy situation.

MHPS has focused on developing the high-efficiency SOFC hybrid power generation system with a very wide range of power output. The system covers everything from medium-capacity (250 kW class) distributed power sources to large-capacity centralized power sources including Gas Turbine Fuel Cell (GTFC) combined cycle and Integrated Coal Gasification Fuel Cell (IGFC) combined cycle technologies, which are advocated by the "Council for promoting the early achievement of next-generation thermal power generation" of the Ministry of Economy, Trade and Industry.

2. Composition of SOFC-MGT hybrid system

Figure 1 illustrates the structure of a cell stack which is a power generation element of tubular type SOFC. On the outer surface of the substrate tube, which is a structural member made

*1 Manager, Fuel Cell Business Department, Mitsubishi Hitachi Power Systems,Ltd.
*2 Fuel Cell Business Department, Mitsubishi Hitachi Power Systems,Ltd.
*3 Chemical Research Department, Research & Innovation Center
*4 Heat Transfer Research Department, Research & Innovation Center

of ceramics, an element (laminated anode, electrolyte, and cathode) reacting to generate power is formed and an electron-conductive ceramic interconnector connects these elements in series. Several hundred cell stacks are bound to form a cartridge, and several cartridges are contained in a pressure vessel. This is called an SOFC module (**Figure 2**).

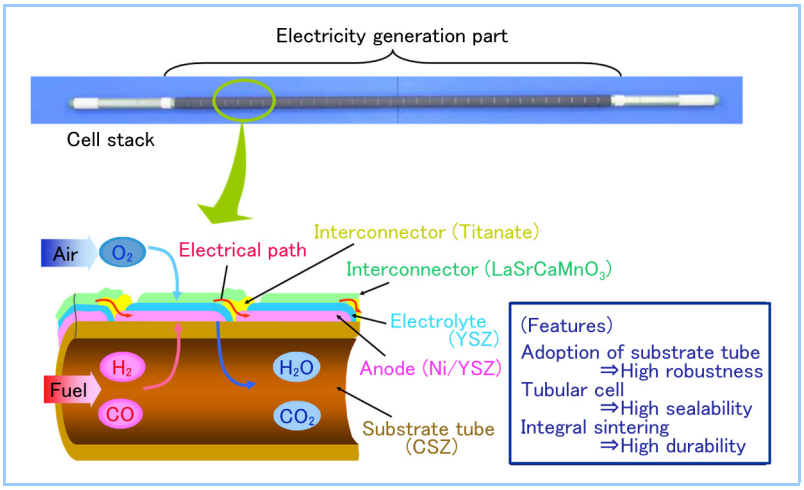

Figure 1 Structure of cell stack

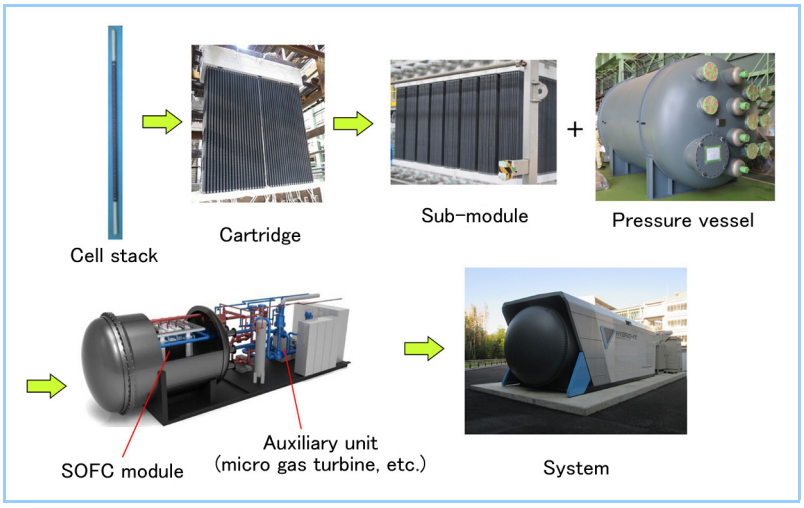

Figure 2 Composition of hybrid system

This system consists of the SOFC, Micro Gas Turbine (MGT), recycle blower, etc. Power is generated in the two stages of the SOFC and MGT. Furthermore, when a waste heat recovery device is installed on the exhaust gas line, it can be utilized as a co-generation system that supplies steam or hot water at the same time (**Figure 3**).

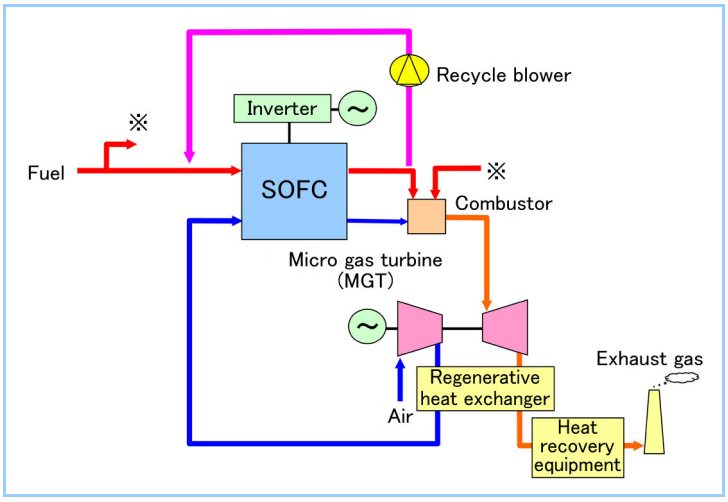

Figure 3 Hybrid system

3. Efforts with 250 kW class

In fiscal 2015, under the NEDO-subsidized project "Technical demonstration of commercial system using solid oxide fuel cells," demonstration tests under an actual load environment were started toward introduction to the market.

The demonstration sites consist of four bases: Motomachi Plant of Toyota Motor Corporation, Komaki Plant of NGK Spark Plug Co., Ltd., Senju Techno Station of Tokyo Gas Co., Ltd. and Technology Center of Taisei Corporation (**Figure 4**).

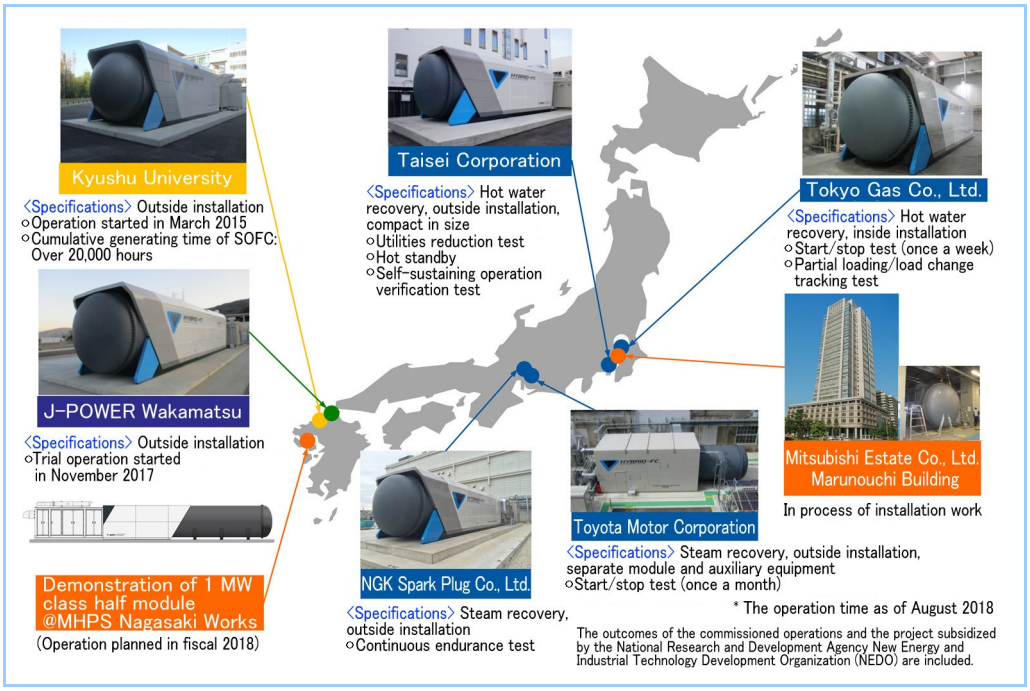

Figure 4 Operation and planning status for the fuel cell SOFC

In this subsidized project, the respective main subjects/verification items have been set at each site and the demonstration tests are being carried out. The details of the demonstration test at each site are as described below. At each site, the effects of changes in power demand and start/stop operation on the performance and durability are assessed.

- The demonstration system for Toyota Motor Corporation: The start/stop operation test (once a month) is continuing.
- The demonstration system for NGK Spark Plug Co., Ltd.: The continuous durability test is continuing.
- The demonstration system for Tokyo Gas Co., Ltd.: The start/stop operation test (once a week) was conducted 31 times.
- The demonstration system for Taisei Corporation: The self-sustaining function verification test was completed.

Based on the results of the demonstration tests, the introduction of the 250 kW class system to the market commenced in 2017. The results of the demonstrations at the four sites have been reflected in the models to be introduced to the market. The first commercial system was delivered to the Marunouchi Building owned by Mitsubishi Estate Co., Ltd. and its operation will commence by the end of the current fiscal year. As of August 2018, the installation of the main body has been completed.

For the NEDO Research and Development Project "Research on coal gas application for fuel cell module" which was implemented by Electric Power Development Co., Ltd. (J-POWER), the 250 kW class system was delivered to Wakamatsu Laboratory of J-POWER in fiscal 2017.

4. Status of Demonstration of 1 MW class SOFC-MGT hybrid system

Concerning GTFC, in which SOFC and a gas turbine are combined, the “Technology Roadmap for Next-Generation Thermal Power Generation" developed by the government and private sector committee in July 2015 indicates that the commercialization and mass production of the small-size GTFC (1 MW class) will be promoted to reduce the cost of SOFC, and demonstration projects using small- and medium-sized GTFC (100,000 kW class) will be conducted toward the establishment of the technologies around 2025.

In fiscal 2016, under the NEDO commissioned project " Gas turbine fuel cell combined cycle (GTFC) technology development", the verification of the small-sized GTFC (output: 1 MW class, operating pressure: 0.6 MPa class), which has a capacity/pressure condition closer to the small- and medium-sized GTFC (output: 100,000 kW class, operating pressure: 1.0 to 1.5 MPa class) compared with the conventional unit (output: 250 kW class, operating pressure: 0.2 MPa class) started at MHPS Nagasaki Works, toward introduction to the market. In the actual 1 MW class system, two SOFC module units will be installed. In this research and development project, only one SOFC module unit, which is half the number of units required for 1 MW class, is used to conduct the test, and is called a half module (**Figure 5**).

As of September 2018, the installation of the half-module demonstration unit has been completed and the half-module unit is being adjusted in the trial operation before power generation (**Figure 6**). In the future, the demonstration operation of the half-module unit will be conducted to study the system specifications of an actual 1 MW class unit with its marketability being considered.

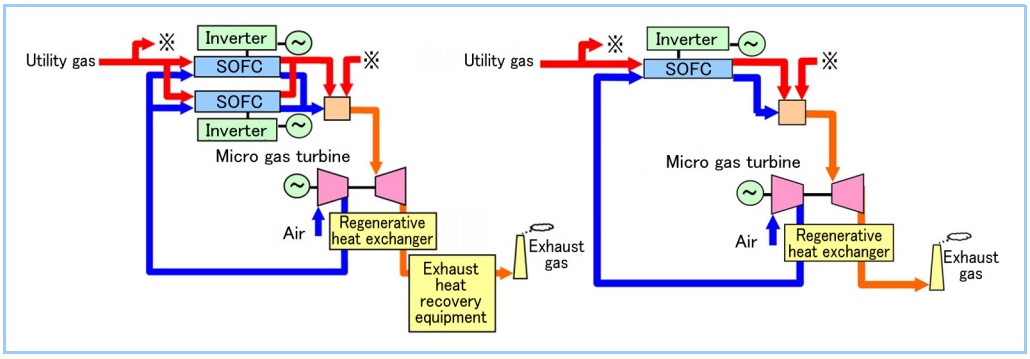

Figure 5 Compositions of the actual 1MW class unit and the demonstration unit

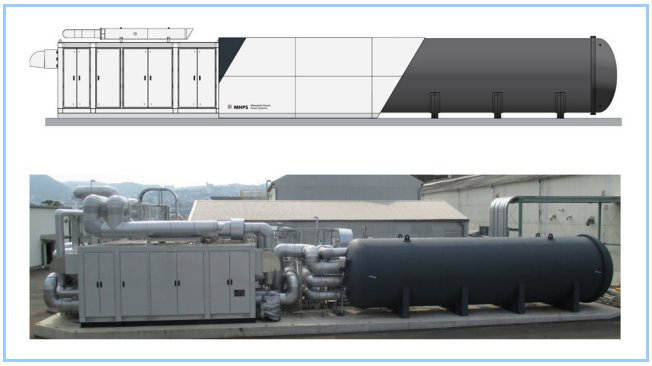

Figure 6 State of the installed half-module demonstration 1MW class unit

5. Conclusion

MHPS positions the SOFC hybrid power generation system as a key effective technology for making the reduction of CO_2 emissions and the stable supply of power compatible.

The 250 kW class demonstration units were installed at four sites in Japan in fiscal 2015, and the demonstration was conducted toward introduction to the market and its stable operation was verified. Based on the results, the system’s introduction to the market started in fiscal 2017. The first commercial unit has already been delivered to the Marunouchi Building owned by Mitsubishi

Estate Co., Ltd. and its operation will commence by the end of the current fiscal year.

Since fiscal 2016, the verification of the 1 MW class unit, which has an increased capacity compared with the 250 kW class unit, has been carried out. Currently, the demonstration test is being conducted at MHPS Nagasaki Works. We are willing to steadily establish the technologies through this demonstration test, promote early commercialization, and greatly contribute to the establishment of a "safe and sustainable energy environment society."

(Acknowledgment)

This paper includes the outcomes from joint research, etc., by the National Research and Development Agency New Energy and Industrial Technology Development Organization (NEDO). We are deeply grateful to all the concerned parties, the universities and research institutions for giving us guidance and advice and the electric power companies, gas utility companies, manufacturers and others for giving us guidance on development and verification.

References

(1) Y. Kobayashi, et.al. Development of Next-Generation Large-Scale SOFC toward Realization of a Hydrogen Society, Mitsubishi Heavy Industries Technical Review Vol. 52 No. 2(2015)

(2) Y. Ando, et.al. Demonstration of SOFC-Micro Gas Turbine (MGT) Hybrid Systems for Commercialization Vol.52 No.4 (2015)