Compact Variable Speed Drive System for Compressor Driver with Low CAPEX and Low OPEX which born under New Idea

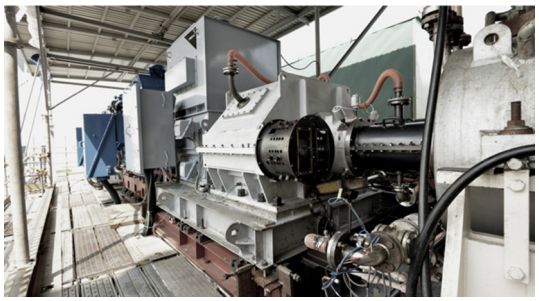

Mitsubishi Heavy Industries
Compressor Corporation

In recent years, there have been moves toward motorization in many fields to facilitate operation and reduce maintenance costs. In the industrial equipment field, the number of cases where electric motors are adopted for drivers has increased.

Motors have conventionally been operated at a constant frequency of 50Hz or 60Hz. Along with the increase in the capacity of frequency converters (inverters), motors have been used as large-capacity and variable-speed drivers with the frequency being changed.

With such a background, the number of electric variable speed drivers used in large-capacity compressors has been increasing.

On the other hand, the number of large-capacity electric variable speed drivers used is yet few, and the number of manufacturers of transformers and inverters requiring such a special capacity are limited. Therefore, the customer's equipment purchase cost increases, and the operating cost also increases due to the power loss of the transformer and inverter. These increased costs are the negative factors in introducing them.

In order to solve the aforementioned issues, a new idea was produced where the main power of a compressor is supplied by a large capacity constant speed motor and the power contributing to the variable speed is supplied by a small-capacity variable speed driver. Under this new idea, a low-cost and high-efficiency variable speed driver for compressor drivers, the IMG-VSDS (Integrated Motor Gear - Variable Speed Drive System), was developed, in which two powers are integrated at the speed-increasing gear. A 6MW prototype device was manufactured, and various tests such as overload and severe tests were conducted and the IMG-VSDS was produced.

This report introduces the IMG-VSDS product.

1. Features of IMG-VSDS

1.1 Configuration of train using IMG-VSDS

The IMG-VSDS, an electric variable speed driver, was produced for the purpose of reducing cost and increasing efficiency. Electricity is used because it is easy to handle and acts as a driving source in the driver.

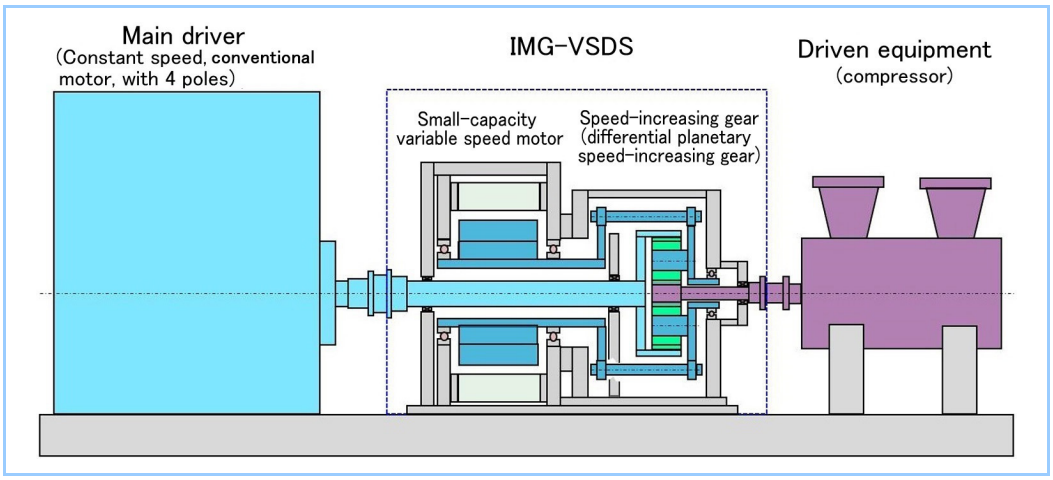

Figure 1 Configuration of compressor train using IMG-VSDS

Figure 1 shows the train configuration with a compressor as the driven equipment. In this system, a constant-speed, conventional motor with 4 poles is used for the main driver, and an electric variable speed driver (IMG-VSDS), which is composed of a small-capacity variable speed motor and a speed-increasing gear (differential planetary speed-increasing gear), is provided between the constant speed motor and the compressor. This system can be operated in a wide operating range for the compressor and achieves cost reduction, increased efficiency and high reliability.

1.2 Variable speed configuration

Figure 2 illustrates the configuration in which the speed of the driven equipment is made variable by the IMG-VSDS. In this configuration, the ring gear which is connected to the main driver and rotates at a constant speed and the planetary carrier which is connected to the small-capacity variable speed motor and rotates at variable speed are combined, so that the sun gear connecting to the driven equipment operates at variable speed. This configuration can reduce the power of the IMG-VSDS variable speed motor at the rated speed of the compressor to about 1/10 of the total power of the train.

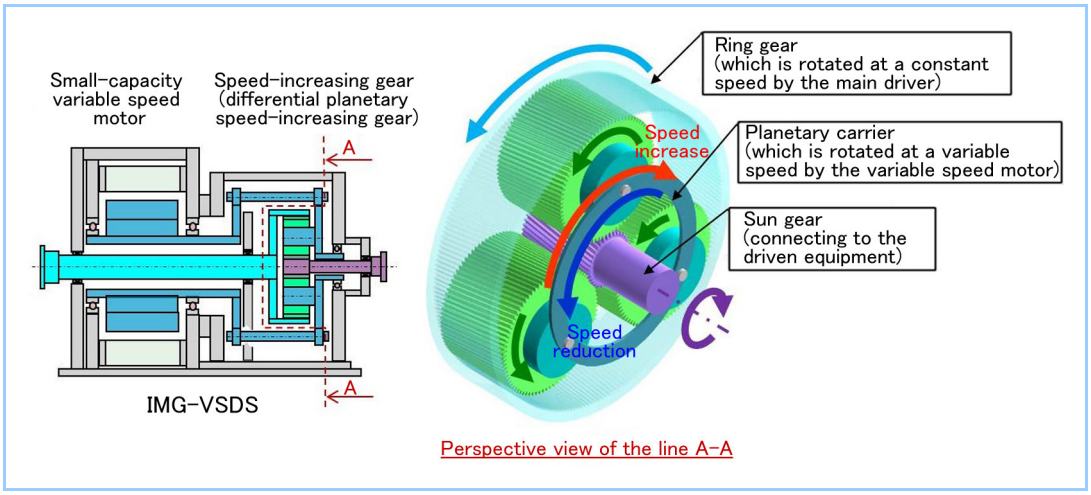

Figure 2 Configuration for variable speed with IMG-VSDS

2. Comparison with conventional variable speed motor driver

The power of the variable speed motor in the IMG-VSDS is about 1/10 of all power. The power flow in the IMG-VSDS and that in a conventional variable speed motor are depicted in Figure 3. The variable speed motor requires the addition of a transformer and an inverter because of its characteristics. The loss caused by these devices is proportional to the power and when the power is reduced to 1/10, the loss is reduced to 1/10. As can be seen in **Figure 3**, in the train of IMG-VSDS, the power of the transformer and the inverter is reduced and the loss is minimized, resulting in increased efficiency in the entire train.

Figure 4 gives a comparison of the efficiency between the IMG-VSDS train and a conventional variable speed motor train. Due to the aforementioned factors, the efficiency of the IMG-VSDS is substantially increased compared with that of the conventional variable speed motor.

In addition, the cost for the transformer and inverter in a variable speed motor largely affects the overall price. Therefore, the reduction of the required power in the IMG-VSDS suppresses the price of the entire train compared with a conventional variable speed motor train. At the same time, the electric room where the transformer and inverter are placed was made compact and the amount of air conditioning equipment and related costs were also reduced.

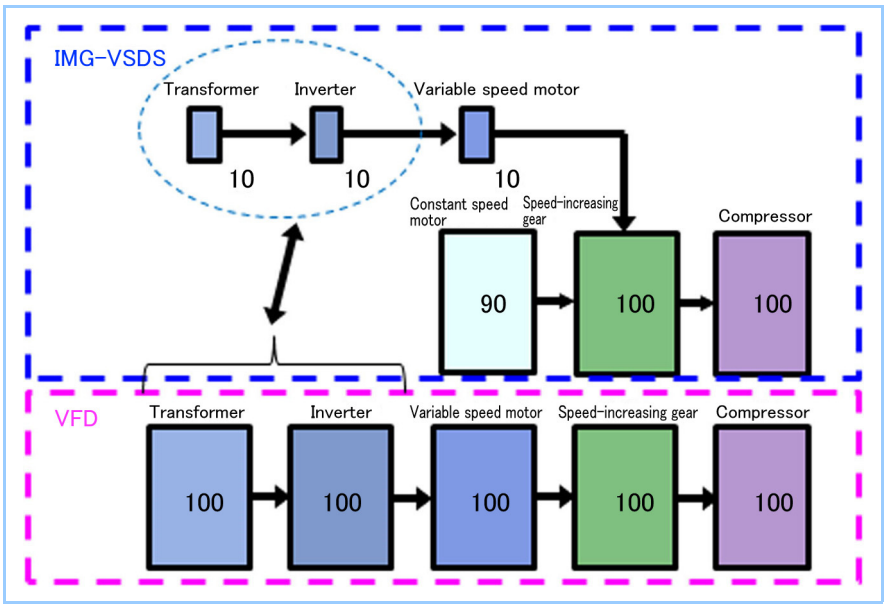

Figure 3 Power flow of IMG-VSDS and conventional variable speed motor

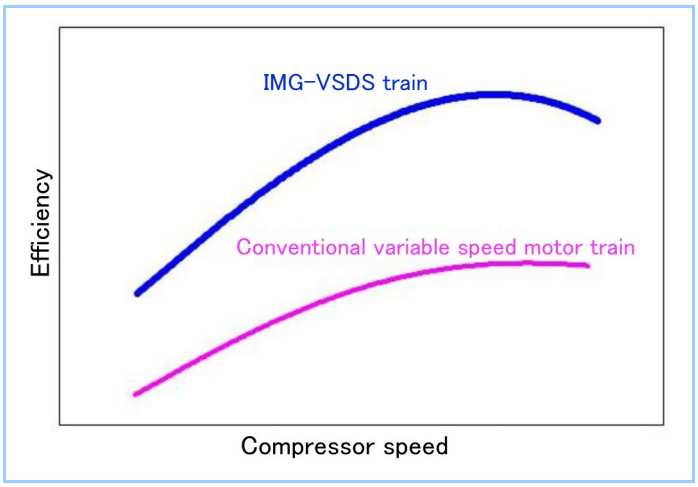

Figure 4 Comparison of efficiency between IMG-VSDS train and conventional variable speed motor train

3. Specifications for commercialization

The IMG-VSDS has three models in the series which correspond to the respective powers of 4MW, 6.3MW and 10MW of compressors as the driven equipment, with the variable speed of the compressor ranging from 75% to 105%. The standard specifications are presented in **Table 1**. If the rated speed of the compressor differs from those in Table 1, customer requirements can be met by partially changing IMG-VSDS speed-increasing gear parts.

Table 1 Standard specifications of IMG-VSDS

Model	IMG04	IMG06	IMG10
Compressor power (MW)	4	6.3	10
Compressor rated speed (rpm)	12500	11200	10000
Variable speed range (%)	75-105		
Power supply frequency (Hz)	50 / 60		
Main driver speed (rpm) (4P constant speed motor)	1500 / 1800		

Figure 5 shows an overview of the compressor train using the IMG-VSDS. The compressor, the IMG-VSDS and the main driver are placed on the common baseplate to make the compressor train compact. A arrangement where a lubricating oil system is integrated in the configuration as illustrated in Figure 5 to make it more compact is also available.

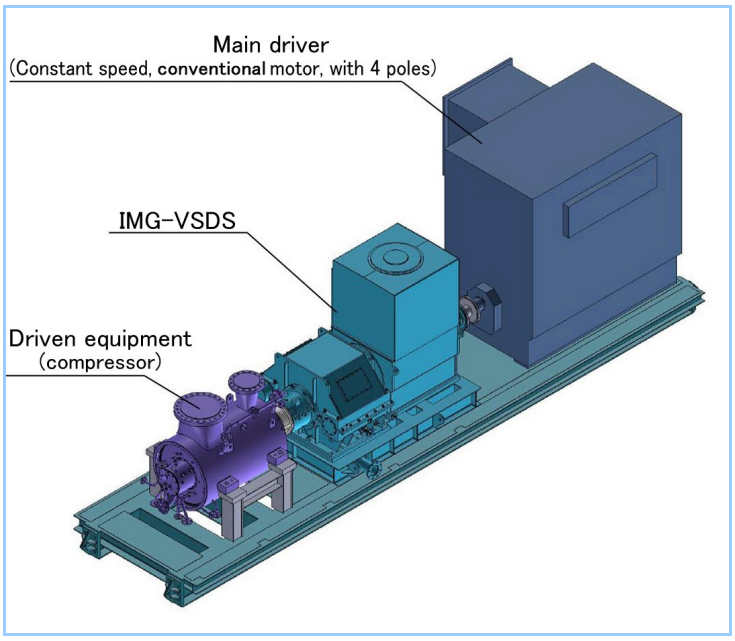

Figure 5 Overview of compressor train using IMG-VSDS

4. Future development

The trend toward electrification has been continuing and the market demand for lower prices and higher efficiency have been increasing. In order to meet this demand, we put the electric variable speed driver developed under the new idea into commercial production.

By supplying the high-efficiency and low-priced, compact electric variable speed driver simultaneously with our high-efficiency compressor, we can minimize customer capital expenditure and operating costs for the future. In addition, now that the variable speed driver has been produced, we can quickly respond to customer issues on the entire compressor train.

Moving forward, we will make efforts to respond to diversifying customer demands and promote technical innovation and the development of new products from the customer's perspective.