Development of GE10A Highly-efficient Dry-cut Hobbing Machine Targeting the Automotive Industry

KAZUYUKI ISHIZU*1 YOKO HIRONO*2
HIROHISA ICHIHATA*1 MASARU UENO*1
YOSHIHIRO NOSE*3

With the growing number of small diameter pinion gears and sun gears for the planetary gear reduction mechanism used for automatic transmissions (AT), the improvement of machining efficiency is an issue. Mitsubishi Heavy Industries, Ltd. (MHI) achieved highly-productive machining for the newly developed GE10A hobbing machine by reducing the time needed for cutting and set-up/tool changing, as well as by reviewing tool specifications. In addition, the working environment was further improved through countermeasures for oil mist discharge and machining noise.

1. Introduction

In today's automotive industry, automatic transmissions (hereinafter referred to as AT) tend to be increasingly multi-staged. As a result, the production volume of small diameter pinion gears and sun gears for the planetary gear reduction mechanism used for AT is increasing. **Figure 1** shows the prediction of the increase/decrease in AT production in Japan. For the machining of pinion gears and sun gears, a dry cutting technology that uses a specially coated hobbing cutter has been widely used. In light of the machining cycle time of pinion gears and sun gears being traditionally short, it is difficult to improve the machining efficiency just by reducing the cutting time, and the proposal of a total solution for gear machining is required.

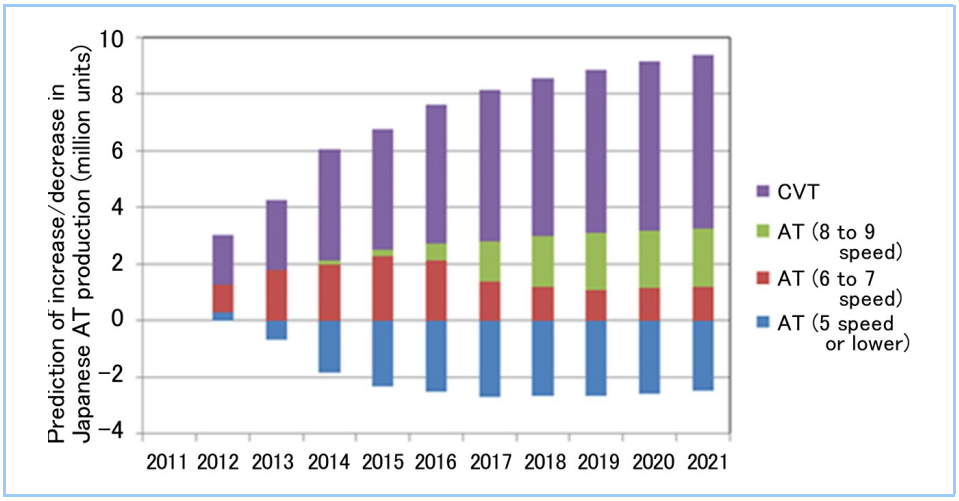

Figure 1 Prediction of increase/decrease in Japanese AT production (showing increase/decrease of production compared with 2011)
Cited from "©LMC Automotive Ltd., 2014. All rights reserved in all countries"

*1 Chief Staff Manager, Engineering Department, Machine Tool Division, Machinery, Equipment & Infrastructure
*2 Engineering Department, Machine Tool Division, Machinery, Equipment & Infrastructure
*3 Manager, Engineering Department, Machine Tool Division, Machinery, Equipment & Infrastructure

2. Improvement of efficiency of gear machining on hobbing machine

2.1 Current issues

The mainstream method of gear machining on hobbing machines is dry cutting that uses blown air, which is superior in cutting conditions than wet cutting that uses coolant to dry cutting that uses blown air for the improvement of cutting conditions. The enhancement of gear machining on hobbing machines only through the improvement of the gear machine itself has its limits. MHI produces not just machines, but also tools, and took advantage of this technological expertise to examine the following three issues for hobbing machines.

[1] Reduction of cutting time through increase of spindle speed
[2] Reduction of non-machining time for exchanging and clamping workpieces
[3] Reduction of machine downtime (set-up/tool changing time)

Our approaches to these three issues are described below.

2.2 Reduction of cutting time through increase of spindle speed

For the reduction of cutting time, it is necessary to enhance the speed of the spindle (hobbing axis) and to develop tools that can be used on the high-speed spindle. Typical dry-cut hobbing machines use a hobbing cutter dedicated to dry cutting that has a special coated high-speed steel hob. In addition, there are tools that can be used for further higher-speed machining such as a carbide hob, a cermet hob, etc. Accordingly, it is necessary for the machine body to feature workability based on tools with various specifications. With an existing high-speed steel hob, the mainstream machining trend was to use a cutting speed of 300 m/min or lower and high-axial cutting feed. However, the need for increased spindle speed is a recent trend, as exemplified by an example of high-speed machining using a carbide hob.

In the development of the GE10A hobbing machine, MHI adopted a built-in motor for the spindle and utilized spindle cooling technology and design expertise cultivated in our machining centers to develop a new spindle that supports a tool from both sides, and this results in a spindle rotation speed about twice as high than that of an existing machine. Through the use of this high-speed spindle, the machining of pinion gears targeting high accuracy resulted in DIN 5 class accuracy, and machining focused on the cycle time resulted in DIN 8 class accuracy.

Figure 2 shows a photograph of the hob head spindle, **Figure 3** shows a DIN 5 class machining accuracy chart of pinion gear machining, and **Figure 4** shows a DIN 8 class machining accuracy chart of pinion gear machining.

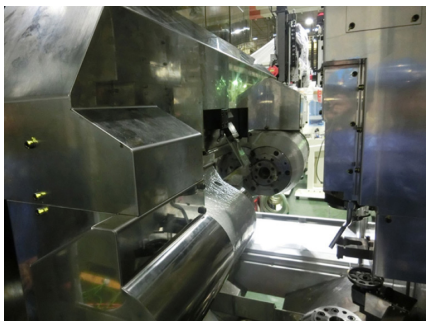

Figure 2 Photograph of the hob head spindle

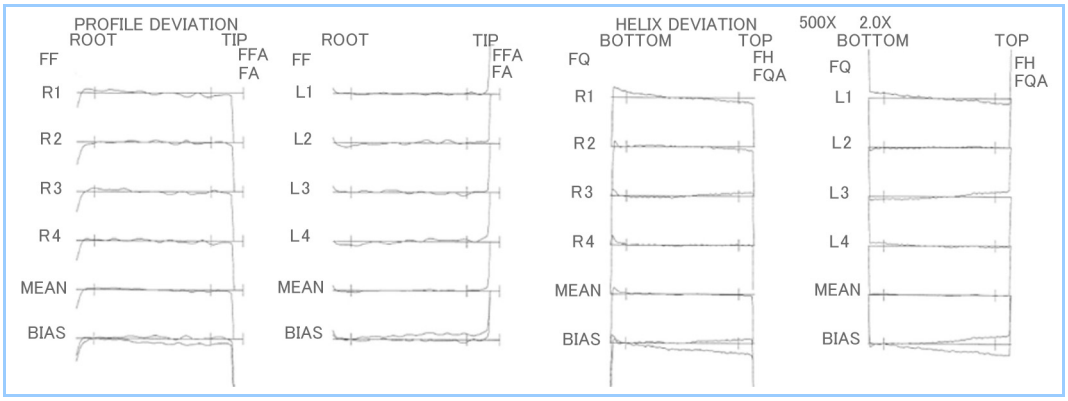

Figure 3 Machining chart (pinion gear DIN 5)

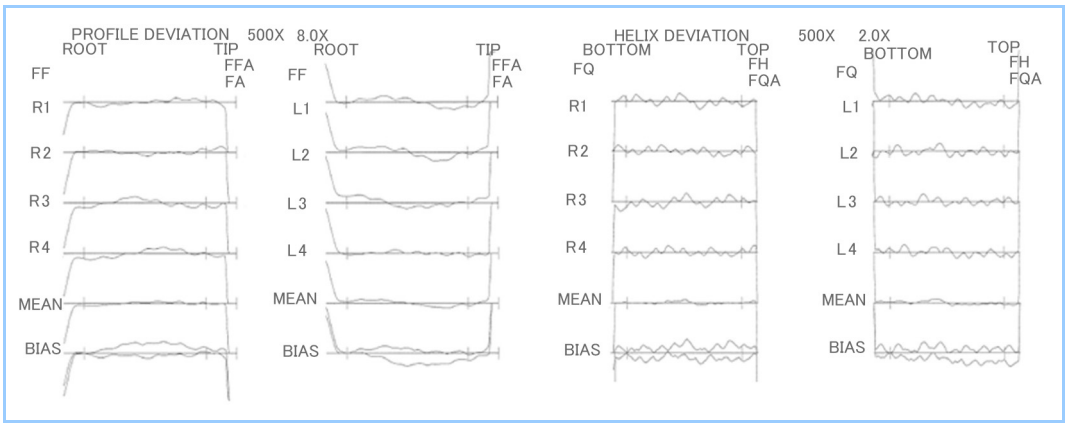

Figure 4 Machining chart (pinion gear DIN 8)

2.3 Reduction of non-machining time for exchanging and clamping workpieces

Next in the development of this hobbing machine, MHI sought to reduce non-machining time including workpiece exchanging and clamping time to the target time of two seconds, which is less than half that of existing machines. To reduce non-machining time, we analyzed the hobbing operation and reviewed the target setting time and the action sequence of the machine operation.

In the case of existing machines, the workpiece exchanging time could not be reduced because the revolution of the workpiece changer and its vertical travel for the insertion of the workpiece into the fixture were performed sequentially for workpiece exchange. To overcome the issue, we adopted a cam unit that allows for the inter-connected operation of the workpiece rotating action and the vertical traveling action for the insertion of the workpiece into the fixture into the workpiece changer, and resulted in a reduction of the workpiece exchanging time by half in comparison to existing machines without compromising the positioning accuracy in conveying the workpiece.

On the other hand, existing machines typically use a pressing-type fixture that clamps a workpiece by pressing its end face using the tailstock. However, this method requires a highly accurate workpiece end face against the workpiece inner diameter reference, causing a problem where the machining accuracy deteriorated depending on the end face accuracy of the workpiece to be machined. As such, we adopted a fixture that uses the tailstock side pressing mechanism to make the collet(Note) fix the inner diameter of the workpiece. This method can clamp a workpiece using the inner diameter reference even when the workpiece end face is not accurate, while maintaining the clamping time equal to a pressing-type fixture.

(Note) A collet is a tube with a bore that is processed according to the shape of the workpiece, and has slits that radiate from the bore center. The workpiece is inserted in the collet and then held by tightening from the outside.

There are two requirements for the adoption of this type of fixture using the collet.

[1] The workpiece can be conveyed with accuracy for insertion into the fixture.

[2] The tail stock pressing force necessary for the activation of the collet can be made.

These issues have been satisfied through the following methods.

[1] The design standards of the accuracy for the insertion of a workpiece into the fixture were reviewed in consideration of the collet holding travel and the gap between the workpiece inner diameter and the fixture.

[2] An NC tailstock system that can change the pressing force using variable motor torque was adopted.

These methods resulted in a significant reduction of workpiece exchanging and clamping time in comparison to existing machines and the attainment of the target non-machining time of two seconds or less during the machining of pinion gears.

Figure 5 shows an external view of the workpiece changer. **Figure 6** shows a cycle diagram with the reduced workpiece exchanging time.

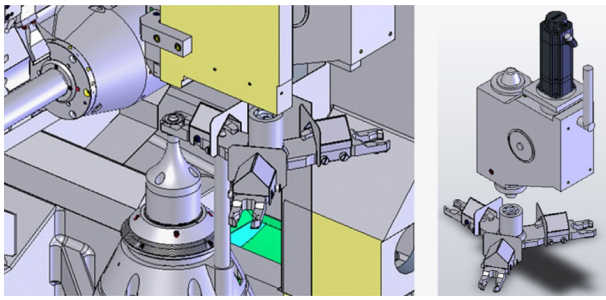

Figure 5 Workpiece changer

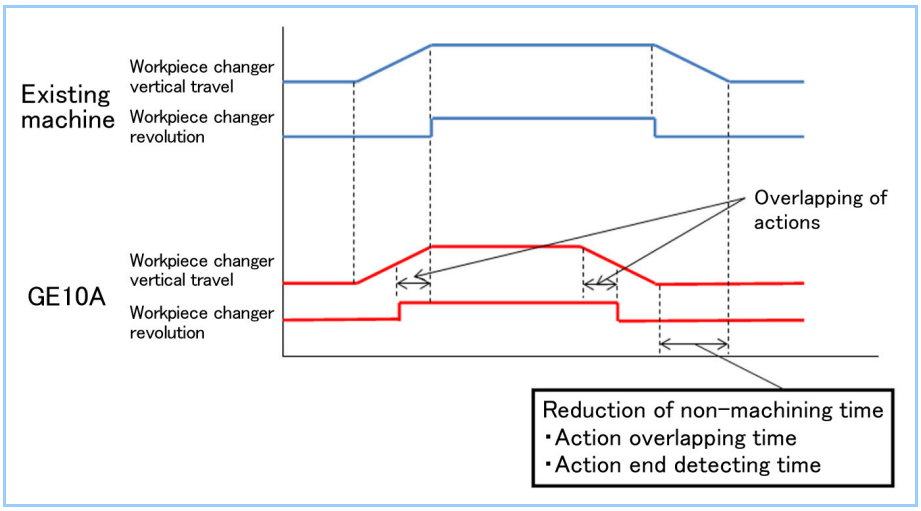

Figure 6 Cycle diagram (Reduction of workpiece changing time: comparison to existing machine)

2.4 Reduction of set-up/tool changing time of the machine

Possible methods to improve efficiency of gear processing include the reduction of tool changing time and set-up changing time when changing the workpiece model to be machined in addition to enhancement of machining efficiency.

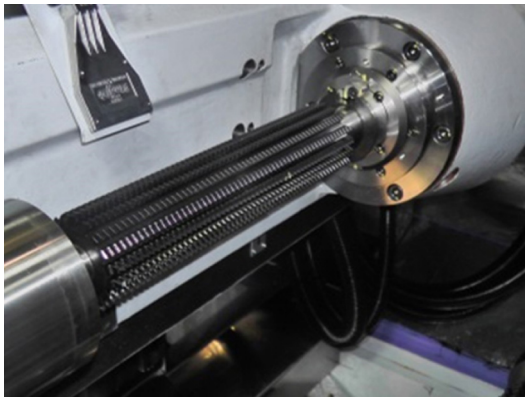

Figure 7 Hob cutter with longer cutting blade (Long hob)

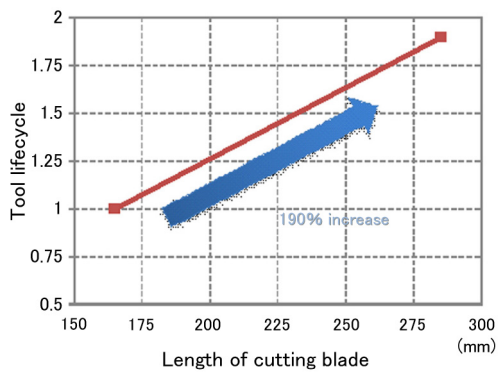

Figure 8 Relation between cutting blade length and tool lifecycle

(1) Reduction of tool changing time

The GE10A hobbing machine adopts a hob cutter that has a handle with a longer cutting blade (long hob), as shown in **Figure 7**, than that of existing cutters, and thereby the tool lifecycle was extended by 90% compared with existing tools and the downtime was reduced. This aims at the extension of the tool lifecycle by 90% compared with existing tools through the use of a cutter with a long cutting blade for the reduction of downtime. **Figure 8** shows the relation between the cutting blade length and the tool lifecycle. This hob cutter with a handle into which the separate parts of the hob cutter and hob arbor (the holder necessary for mounting a cutter on the machine tool) are integrated eliminates the work to set the hob cutter into the arbor, and reduces the centering time. In addition, this integration of the hob cutter and hob

arbor enables the reduction of the spindle vibration level during operation using a cutter to one-third of the conventional hob arbor system, and therefore tool lifecycle extension can be expected. **Figure 9** compares spindle rotation frequency vibration levels.

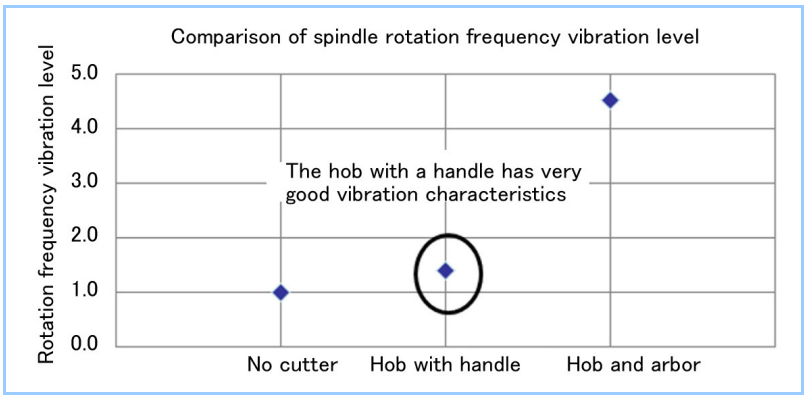

Figure 9 Comparison of spindle rotation frequency vibration level

(2) Minimizing tool changing time through the use of ATC

A hob cutter that has a handle with a long effective cutting blade can extend the tool lifecycle in comparison to an existing cutter. But its weight, up to approximately 9 kg for a tool diameter of 65 mm and 20 kg for 100 mm, is heavier than an existing hob cutter. For this reason, cutter exchanges by the operator become less frequent, but the burden on the operator in terms of tool exchange work becomes greater due to the heavy weight. To relieve this burden, this machine is equipped with an optional automatic tool changer (ATC) in order to reduce tool changing time.

Figure 10 shows the ATC tool changing position and the state where the top cover is opened in conjunction with the front door. Even when machining is ongoing, the operator can set a hob with a handle into the exchange stand safely at the tool changing position on the side opposite to the operator where is shielded from the machining chamber. When a hob with a handle reaches its life end during machining, the automatic tool changer ejects the hob with a handle to the tool changing position on the side opposite to the operator and then sets a new hob with a handle into the spindle. In addition, usability is considered such that a hub with a handle can be conveyed to the machine not by using the ATC, but by lifting it with a crane through the top cover that opens inter-connectedly with the front door.

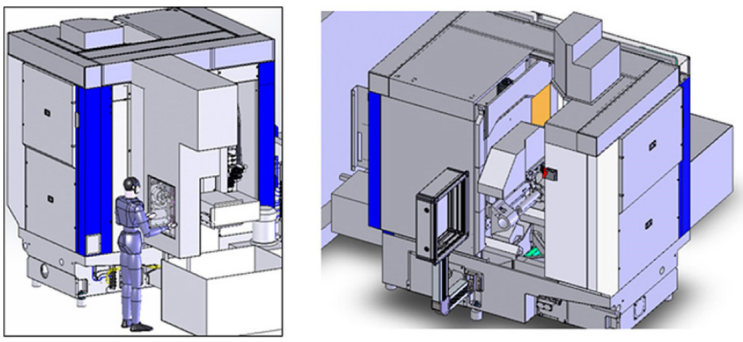

Figure 10 ATC tool changing position (left) and the state where the front door is opened (right)

(3) Reduction of set-up changing time when changing the workpiece model to be machined

The GE10A hobbing machine has a workpiece conveying grip that can be exchanged without a tool when the set-up needs to be changed whenever the workpiece to be machined is changed. **Figure 11** shows an external view of the conveying grip. The centering of the grip can be performed easily and repeatedly by pressing its mounting reference surface into the conveying arm when installing. This results in a significant reduction of the centering time in comparison to the existing grip, and enhances maintainability, which can reduce the set-up changing time when changing the workpiece to be machined.

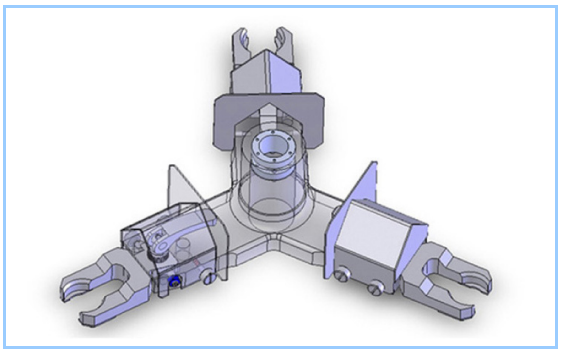

Figure 11 Conveying grip

3. Human-friendly machining environment

There is concern that improvement in efficiency of gear machines causes environmental degradation for the operator who operates the machine. The dry-cut hobbing machine does not use coolant and provides a human-friendly environment with no adverse effects on the human body caused by the coolant or the cleaning of the inside of the machine. In addition, the GE10A hobbing machine suppresses oil mist discharge by minimizing the amount of oil used for intermittent lubrication by reducing the number of intermittent lubricating points and increasing the number of grease sealing points in comparison to conventional machines.

There is also concern that the higher-speed machining capability of the GE10A hobbing machine in comparison to existing machines causes an increase in machining noise. Particularly in the North American market, where the noise requirements are more severe than Japan, a machine that causes environmental degradation of the operator is considered to be a product with major quality problems and will not be accepted by customers even if it attains high efficiency. For this reason, MHI targeted the machining noise of the GE10A at 77 dB TWA (time weighted average), which is required in the North American market, while also improving the hobbing efficiency.

To achieve this goal, it is first necessary to clarify the cause of noise generation and take appropriate measures to reduce noise during machining. As such, we made a machining noise analysis model of the hobbing machine and verified the analysis accuracy to establish noise reduction measures and analytically evaluate their effects in advance. Based on the results and in consideration of feasibility, a damping material to be attached to the cover parts was adopted. The specifications of the damping material were selected by comparing the damping performance, chip-resistance, appearance, cost and other characteristics that conflict with each other. We performed a machining noise test using the selected damping material and verified that this measure attained a reduction of the machining noise to 77 dB TWA (time weighted average) or less, the requirement for the North American market.

4. Conclusion

In developing the GE10A hobbing machine, which can cut pinion gears and sun gears efficiently, we reviewed the tool specifications, and enhanced the machining speed and reduced the non-machining time and downtime. In addition, we succeeded in the improvement of the working environment through countermeasures for oil mist discharge from the machine and machining noise.

Henceforth, we will seek to expand the market for the GE10A hobbing machine, and offer optimum gear machining solutions mainly focusing on customers in the automotive industry.