# Shinkansen Maintenance Vehicle

Vehicle Department
Transportation Systems Division

The safe and stable operation of Shinkansen bullet trains, a source of great pride in Japan, depends on a daily maintenance program that takes place outside of operational hours. Because very little time is available for maintenance, due to the operational schedule of the trains, a series of specialized maintenance vehicles has been developed to improve work efficiency. In response to the new operational needs of our customers, Mitsubishi Heavy Industries, Ltd. (MHI) started development and production of Shinkansen maintenance vehicles in 2007 and completed delivery in 2011. This report presents the functional requirements for these maintenance vehicles and describes the onboard equipment.

## 1. Operational overview

Maintenance vehicles are stationed on bases along the tracks, enter the tracks at night after the end of daily train operations, and then return to their bases before trains start running the next morning. These vehicles perform a wide variety of operations including replacement and inspection of catenary, removal of fallen trees, and replacement of rails and utility poles. The different types of vehicles, including the maintenance wagon (MW), tunnel inspection wagon (TW) and service wagon (SW), vary significantly in their specifications, configurations, and dimensions. They are all powered by diesel engines so they can operate without wayside power.

Maintenance operations usually take place at night according to the maintenance plan. Reliability and the ability to recover from unforeseeable situations are essential features of maintenance vehicles, because their failure can significantly affect the entire Shinkansen network.

MHI's maintenance vehicles are characterized by a common design incorporated into elements that constitute railroad maintenance vehicles - the bogie, propulsion and control systems. Each specific piece of onboard equipment is designed as a unit and the units are used in various combinations to create vehicles tailored for various requirements. The reliability of various types of vehicles has been improved and maintenance procedures have been standardized through these measures.

## 2. Requirements

**Table 1** shows the specifications of the maintenance vehicles.

The requirements for the vehicles are as follows.

(1) Mechanization of operations performed by workers

Maintenance operations are performed by manual operation or skilled workers using machines. Multifunctional vehicles are required to support these mechanized maintenance operations and reduce maintenance times.

The maintenance vehicles feature visual confirmation of each automatic operation to prevent failure of equipment and the operations include:

・the ability to change vehicle travelling direction

- the ability to move to the small mechanical base parallel to the tracks where it is stored
- the ability to extend worker reach
- an auxiliary function for visual check

(2) Self-recovery function

Self-recovery is the state of restoring operation after a failure using onboard equipment. Failures of maintenance vehicles must not affect other scheduled maintenance operations. This function provides:

- recovery from derailing
- auxiliary power in the case of loss of hydraulic power
- auxiliary power in the case of loss of diesel engine function
- manual operation in the case of electrical control system failure

**Table 1 Maintenance vehicle specifications**

| | | | | | |
|---|---|---|---|---|---|
| Total length | 7,140 mm | Maximum speed | | | 70 km/h (min) |
| Total width | 3,000 mm | Movable load | | | 1,000 kg (max) |
| Total width | 3,400 mm | Maximum rated output | | | 200 kW/2,200 $min^{-1}$ |
| Total height | 4,450 mm | Running performance | Free-running | 0 ‰ | 70 km/h (min) |
| Track spacing | 1,435 mm | | | 15 ‰ | 60 km/h (min) |
| Axle spacing | 3,700 mm | | 20 t trailing | 0 ‰ | 60 km/h (min) |
| Wheel diameter | 762 mm | | | 15 ‰ | 30 km/h (min) |
| Number of occupants | 6 (max) | | Constant-speed running | 0 ‰ | 10 km/h (min) |
| Weight during operation and maintenance | 22,400 kg (max) | | | 15 ‰ | 5 km/h (min) |

## 3. Onboard equipment

The devices described below are mounted on the vehicles and were newly developed based on operational experience.

(1) Work platform and lift table

The work platform (**Figure 1**) can be raised up to 900 mm during inspection and replacement of catenary wires. The work platform can remain horizontal despite any track cant by proper adjustment of the two pairs of hydraulic cylinders that support it.

The lift table was designed for tunnel ceiling inspections based on operational input from customers. Its range was expanded by providing a mechanism to allow moving it laterally as well as vertically.

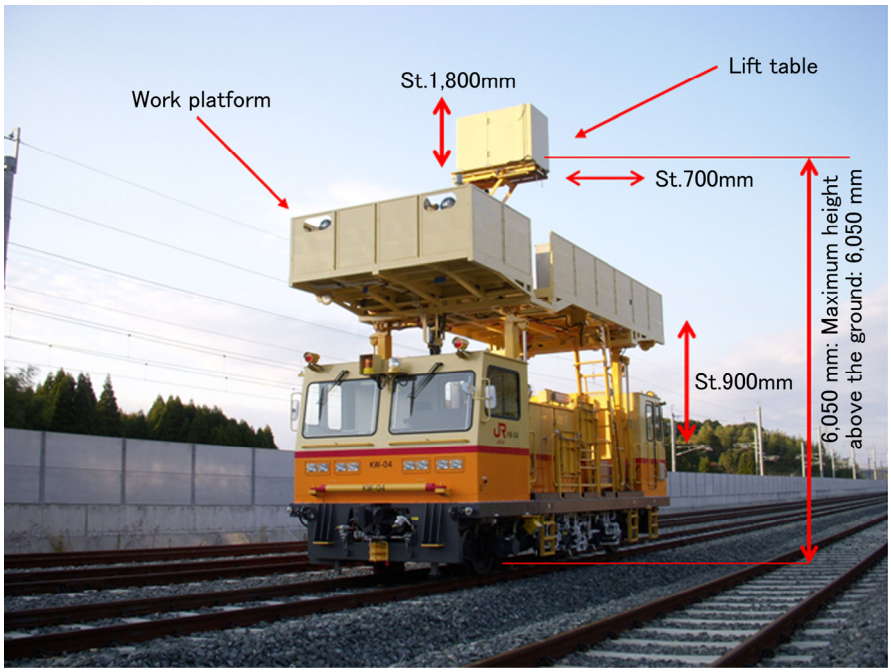


**Figure 1 Work platform**

(2) Vehicle body lifting/lowering/turning system

This system is mounted on the central bottom of the vehicle. Two vertical hydraulic cylinders are located on the left and right sides of the vehicle along with a large horizontal bearing in the center. The entire vehicle can be lifted up to 240 mm via synchronized actuation of the cylinders. This mechanism was realized by positioning the devices with consideration for their balance so that the center of gravity of the wagon remains within the limited space between the hydraulic cylinders on both sides of the wagon.

This system allows the vehicle to be stored on a storage base. This system also allows the use of onboard equipment (such as a crane) located on one side of the vehicle on either side of the track (**Figure 2**).

(3) Grounding pantographs

Grounding pantographs, which are installed on the front and rear of the work platform, are used for grounding during catenary wire inspection (**Figure 3**). The conventional spring-loaded system was replaced by a pressurized air system to compensate for variations in the catenary wire heights and equalize the friction forces, in order to improve the accuracy of the friction force and the adjustment range.

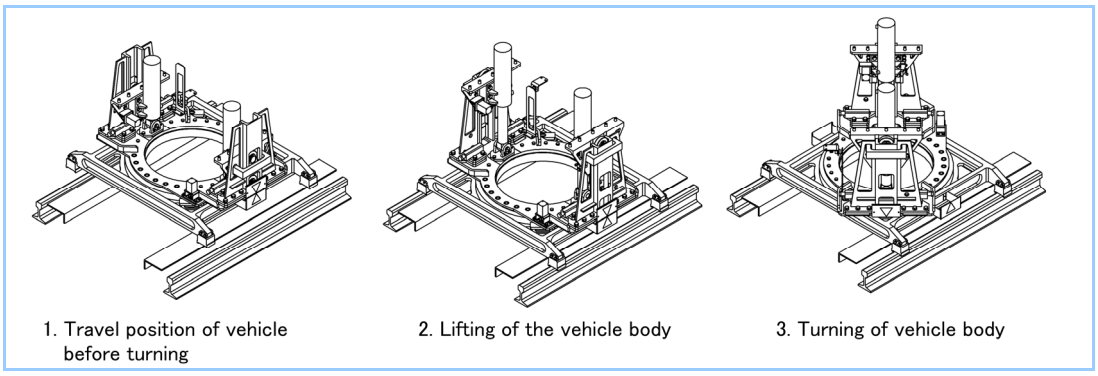


**Figure 2 Vehicle body lifting/lowering/turning system**

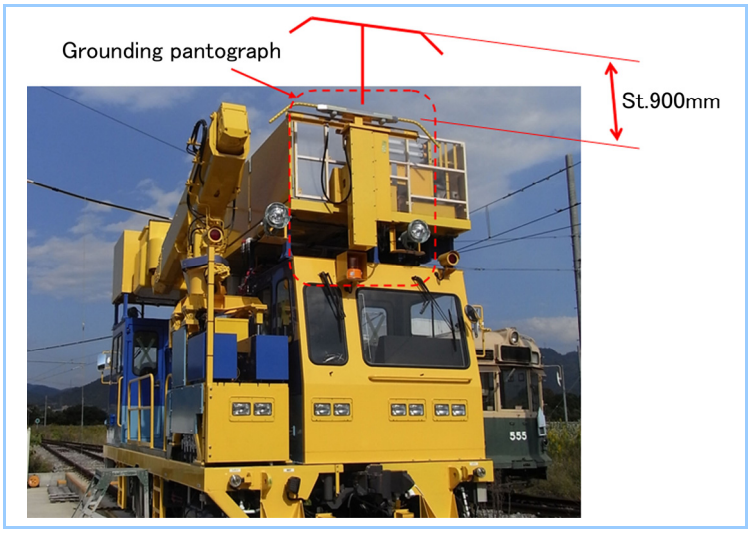


**Figure 3 Grounding pantograph**

## 4. Future Prospects

Continuous, safe and stable operations are expected of the Shinkansen, the mass transportation system, in terms of the global environment and energy issues. The volume of maintenance operations is expected to increase because of the aging of wayside facilities. Current maintenance operations rely largely on human workers, the operational efficiency of whom depends largely on their skill and experience. Therefore, maintenance vehicles that can perform complex maintenance operations mechanically and automatically with little human intervention will be required in the market, as will operational efficiency. MHI will use its technology base and experience as a general equipment manufacturer to develop a next-generation, robot-equipped maintenance vehicle ahead of its competitors to expand foreign and domestic markets.