Technical Considerations and Operation Results for SDA Pitch (Residual Oil)-fired Boilers

TETSUYA TANAKA*1 EIJI TAKAHASHI*2
HIROSHI FUJII*3 SHIGEHARU KOKURYO*4
TAKAO KOIDE*5

Responding to the decline in demand for Heavy oil C, some refineries have been considering introducing solvent de-asphalting (SDA) process to produce lighter refined petroleum. However, utilization of heavy residue (SDA pitch), a byproduct generated from SDA process, remains an issue to be solved. The viscosity of SDA pitch is much higher than that of general heavy oil. It also features high sulfur and nitrogen contents, an increased environmental load, and has seldom been used as boiler fuel. This paper describes a technology applied to modify a boiler plant so that it can use SDA pitch (solvent: C5) as fuel. Successful operation results were obtained from actual application of this technology to both new and modified facilities, the first such facilities in Japan, are also described.

1. Introduction

Because of the recent active demand for petroleum products by developing countries, especially China and India, where economic development has been remarkable, it is anticipated that available crude oil will continue to be heavier. Furthermore, the global demand for lighter refined petroleum will increase due to the worldwide decline in demand for Heavy oil C and limitations on the use of Heavy oil C (Bunker C) in ships in Europe.

To increase the amount of light refined petroleum without increasing the amount of purchased light-gravity crude oil, refineries have been trying to extract the maximum possible amount of light oil or gas from heavy oil by introducing residual oil cracking systems such as delayed cokers and solvent de-asphalting (SDA) systems. Refineries have considered introducing SDA systems, which require lower construction costs and smaller plot size compared to other oil residual cracking systems, but the effective use of heavy SDA pitch, which is a by-product of SDA systems and has limited uses, has remained an issue to be solved.

In this report, new technologies for utilizing SDA pitch (Solvent: C5) as fuel for heavy-oil-fired boiler plants, where the MHI's proven technologies are applied, is described. The operational results of Japan's first SDA-pitch-fired boiler plants (two (2) plants) (newly installed boiler and modified boiler), are presented, and the future prospects of this technology are discussed.

2. Characteristics of SDA Pitch (Oil Residue)

2.1 SDA process

In the SDA process, which is also called the solvent de-asphalting process, vacuum residue (VR) is cracked into de-asphalted oil (DAO) and SDA pitch (residual oil) by using solvents such as pentane. A flowchart of general oil refinery equipment, including an SDA system, is shown in

*1 Manager, Power Systems Plant Engineering & Construction Division
*2 Engineering Manager, Power Systems Plant Engineering & Construction Division
*3 Engineering Manager, Boiler Engineering Department, Power Systems
*4 Manager, Boiler Engineering Department, Power Systems
*5 Power Systems Service Division, Power Systems

Figure 1. However, SDA pitch, generated by upgrading oil from vacuum residue, features high viscosity and contains large amounts of components that affect the atmospheric environment (sulfur, nitrogen, carbon residue, and heavy-metal components).

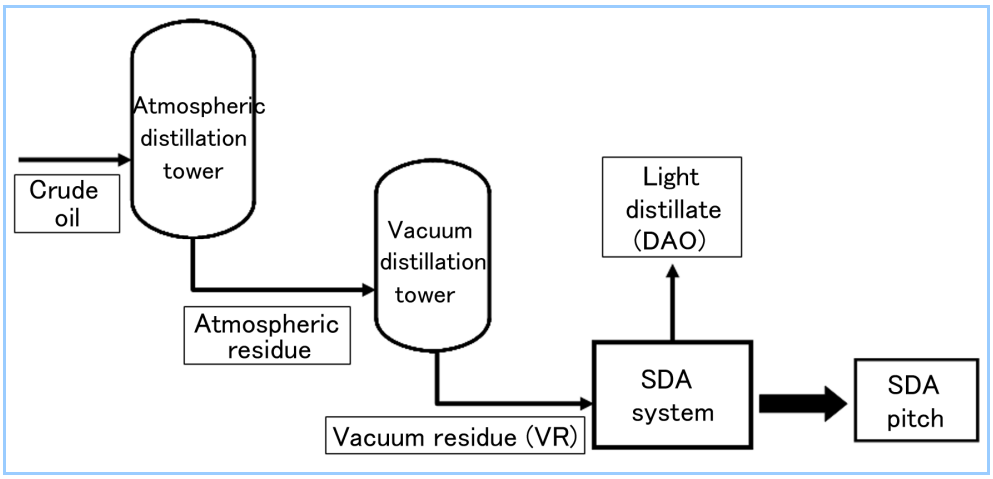

Figure 1 Flowchart of general oil refinery system, including an SDA system

2.2 Characteristics of SDA pitch

The fuel properties of VR[1] and SDA pitch, which represent general heavy oil and heavy-gravity oil, are compared in **Table 1**.

Table 1 Comparison of fuel properties

Item	Units	SDA pitch	VR	Heavy oil C
Specific gravity (15/4°C)	-	1.105	1.03-1.05	0.95
Kinematic viscosity (@100°C)	mm^2/s	> 2,000,000	> 3,000	20
Sulfur	wt%	6.56	4-6	2.3
Nitrogen	wt%	0.75	0.4-0.5	0.2
Ash	wt%	0.08	0.05	0.01
Carbon residue	wt%	42.7	20-30	11
Vanadium	ppm	398	150-250	< 50

The major characteristics of SDA pitch are as follows.

(1) High viscosity

SDA pitch features an extremely high kinematic viscosity that exceeds 2,000,000 mm^2/s at the heated temperature (approx. 100°C) for combustion of general heavy oil C. To lower the viscosity for transport via pipes or to lower the kinematic viscosity for burner atomizing during combustion in boilers, SDA pitch needs to be mixed with light extract to lower the viscosity slightly, and it needs to be heated sufficiently.

(2) High sulfur content

The sulfur content of SDA pitch is approximately 1.3 times that of VR. The increase in the sulfur content increases the chance of high-temperature/low-temperature corrosion of fuel pipes and the internal surfaces of boilers, and also increases the concentration of sulfur oxides (SOx) in the flue gas. Therefore, appropriate anti-corrosion and environmental measures are required.

(3) High nitrogen/carbon residue contents

The nitrogen and carbon residue contents are approximately 1.7 times those of VR. The amounts of nitrogen oxide (NOx) and dust in the flue gas increase in proportion to the nitrogen and carbon residue contents. Therefore, an appropriate dust removal system and environmental measures are required.

(4) High heavy-metal content

SDA pitch contains approximately two times the amount of vanadium (V), a heavy metal, contained in VR. Vanadium oxide forms low-melting-point ash and causes problems such as adhesion of ash on the internal surfaces of boilers and high-temperature corrosion in combination with the high sulfur content described above. This leads to problems when operating boilers continuously.

3. Applied Technology

3.1 Configuration of the SDA pitch-fired boiler plant

Figure 2 shows the major components of the new SDA pitch-fired boiler plant. The plant is composed of fuel-supply system, boiler equipment (fuel-combustion equipment), and environmental systems (flue gas treatment equipment).

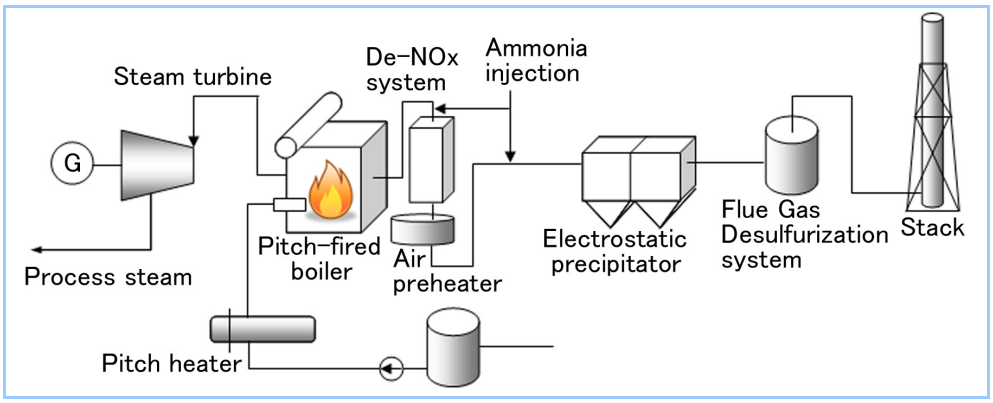

Figure 2 Major components of a typical SDA pitch-fired boiler plant

3.2 Fuel handling technology

A special SDA pitch heater that utilizes high-pressure heated steam (12 MPa class) was used to heat the SDA pitch to a specified temperature so as to lower the kinematic viscosity to an appropriate value for burner atomizing in the boiler. A electric heating trace was used in the fuel transport pipe to prevent the SDA pitch from dropping in temperature, and appropriate materials were used for the pipes and heat exchanger to prevent corrosion.

3.3 Combustion technology

To achieve stable combustion, circular corner firing, where combustion occurs not only in the burner but also throughout the entire furnace, was incorporated. In addition, a low-NOx burner (PM burner) , which was developed for VR and modified for SDA pitch, was combined with an in-furnace NOx removal system (Mitsubishi Advanced Combustion Technology, MACT, system) to achieve low levels of NOx and dust simultaneously.

3.4 Measures against corrosion

Sufficient anti-corrosion measures are required to use fuels with high sulfur content. The following major anti-corrosion measures were adopted.

(1) Metalizing process

A metalizing process was used on the burner zone of the furnace wall to control high-temperature reduction corrosion caused by high concentrations of H_2S.

(2) Fuel additive

A fuel additive was used to control high-temperature corrosion of the superheater caused by high vanadium and sulfur contents.

(3) Anti-corrosion elements

Anti-corrosion elements were adopted in the low-temperature portion of the regenerative air heater to reduce low-temperature corrosion. In addition, the flue gas temperature was controlled using a steam air heater.

(4) Low-oxidation catalyst

A low-oxidation catalyst manufactured by MHI was adopted to control conversion of SO_2 to SO_3 by NOx removal and to reduce corrosion of the low-temperature portion.

3.5 Measures against air pollution

(1) Nitrogen oxide (NOx)

In addition to reducing the NOx generation rate by the measures outlined in Section 3.3, a de-NOx system was installed to achieve a specified NOx value. Up to 90% of the NOx can be removed by the de-NOx system.

(2) Sulfur oxide (SOx)

SDA pitch contains an extremely large amount of sulfur. Most of the sulfur content is

converted to SOx, and therefore, the SOx concentration in the flue gas exceeds 4,000 ppm at actual O_2 base. A flue-gas desulfurization system (limestone–gypsum method) is essential to keep the amount of SOx below the specified value. Furthermore, a system that injects ammonia into the upper stream of the dry electrostatic precipitator and collects SO_3 in the flue gas in the form of ammonium sulfate was introduced to control corrosion and blue smoke (at stack outlet) attributable to SO_3.

(3) Dust

A dry electrostatic precipitator was also used to conform to the specified dust value for the flue gas. The electrostatic precipitator was mounted using a discharging electrode with long prickly projections, and hammering system, which was operated to be linked with the movement of the outlet damper, was incorporated to collect the high concentration of dust in the flue gas.

3.6 Design suitable for continuous operation

The following considerations were given to the design to ensure long-term continuous operation, in addition to the measures described above.

(1) Adoption of reinforced soot blowers

Reinforced soot blowers were mounted on the superheater, economizer and regenerative air heater.

(2) Separation of the economizer

The economizer was separated into two parts, which were positioned on both sides of the de-NOx system. The amount of passing gas was adjusted using a gas bypass in consideration of the temporal increase of the boiler flue gas temperature due to soiling of the heating surface, making it possible to always maintain the gas at the inlet of the de-NOx system at an appropriate temperature.

(3) Sectional charging in the electrostatic precipitator

Dust contained in the flue gas generated from the combustion of heavy-gravity oil such as SDA pitch sometimes adheres strongly to the collecting and discharging electrodes of the electrostatic precipitator, causing a faulty charge. To avoid having to stop the entire dust collector due to partial faulty discharges, the charged section of the precipitator was divided into small blocks to allow isolation of portions with faulty charges.

(4) Gas ducts

As much as possible, the shapes and arrangements of the ducts were designed and the operating method of the equipment was updated to prevent clogging due to adhesive ash and to avoid limited operation due to increased draft caused by clogging.

4. Application to Actual Equipment

4.1 New boiler

New boiler equipment was installed to Asahi Kasei Chemicals Corporation and Zeon Corporation in 2009. The major specifications are listed in **Table 2**. The components and technologies used in these facilities are explained above. The flue gas processed in the environmental system merged with the flue gas from the existing plant and was exhausted from the existing common-use stack.

Table 2 Outline of the equipment for a new plant

1	SDA pitch-fired boiler		2	Steam turbine	
	(1) Model	Mitsubishi natural-circulation boiler single-drum radiant type		(1) Model	Mitsubishi single-stage impulsive extraction back-pressure turbine
	(2) Quantity	1 unit		(2) Quantity	1 unit
	(3) Maximum continuous evaporation capacity	400 t/h		(3) Rated output	50.6 MW
	(4) Steam condition	12.70 MPag × 536°C		(4) Exhaust pressure	0.43 MPag
	(5) Combustion method	Circular corner firing	3	Environmental system	
	(6) Fuel	SDA pitch (VR: for backup) (Sumatra light heavy oil : for starting/stopping)		(1) De-NOx system	Dry de-NOx system
				(2) Dust-collecting system	Dry electrostatic precipitator
				(3) Flue-gas desulfurization system	Limestone–gypsum method

4.2 Modification of an existing boiler

The existing boiler of Mitsubishi Chemical Corporation was modified in 2009. Major changes in the specifications due to the modifications are listed in **Table 3**. The areas of the modifications are shown in **Figure 3**, and a full view of the equipment is shown in **Figure 4**.

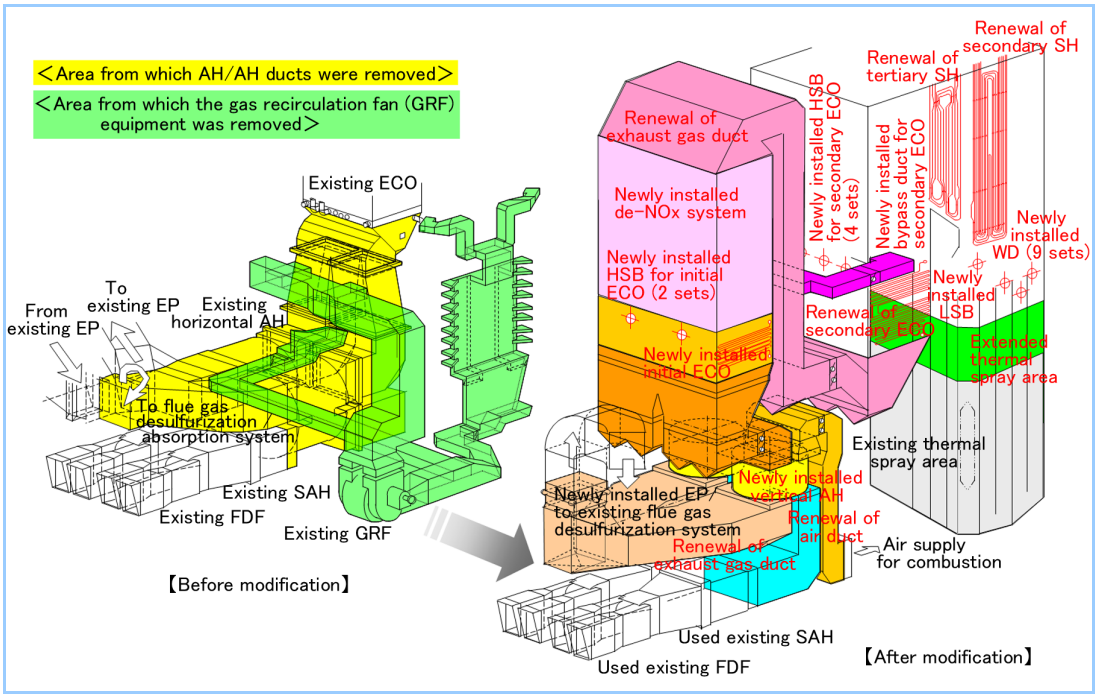

Figure 3 Areas of modifications

Table 3 Specifications before and after the modification of an existing boiler

	Before modification	After modification
(1) Boiler model	Mitsubishi once-through boiler	Same as left
(2) Evaporation capacity	600 t/h	450 t/h
(3) Evaporation condition	12.2 MPag × 541°C	Same as left
(4) Combustion method	Circular corner firing	Same as left
(5) Fuel	Mixed heavy oil, by-product oil, by-product gas (LS heavy oil: for backup)	SDA pitch, by-product oil, by-product gas (VR: for backup) (Mixed heavy oil: for backup, starting, stopping) (LS heavy oil: for backup)

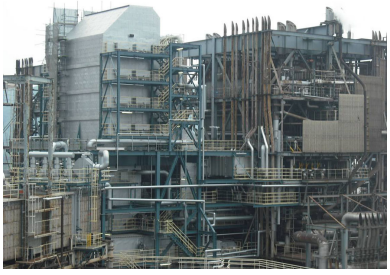

Figure 4 Full view of the modified equipment

The following were considered when modifying the existing equipment.

(1) Introduction of de-NOx system

Because the existing flue gas recirculation (GR) equipment did not meet current NOx regulations, it was removed and new de-NOx system was installed.

(2) Introduction of an electrostatic precipitator

Because the capacity of the existing electrostatic precipitator was insufficient and the reaction distance for the injected ammonia and SO_3 was insufficient when the SO_3 removal system was used, a new electrostatic precipitator was installed at a sufficiently distant position. The aforementioned sectional charging system was not applied.

(3) Renewal of the regenerative air heater

The existing horizontal regenerative air heater was replaced by a vertical one following the change in the duct arrangement due to the introduction of the de-NOx system.

(4) Renewal of the secondary and tertiary superheaters

The secondary and tertiary superheaters were replaced with ones made from higher-quality materials as a measure against high-temperature corrosion.

(5) Renewal of the economizer

The de-NOx system was installed between the initial economizer and the secondary economizer, splitting the existing economizer into two parts, in anticipation of soiling over time.

(6) Expansion of the metallization area

The existing boiler was metallized up to the burner level when it was modified to an orimulsion-fired boiler. The metallization area was further extended up to the top area of the burner level as a measure against corrosion due to sulfidation and reduction.

(7) Burner modification

The burners up to the third stage from the bottom were modified to SDA pitch-fired oil burners.

5. Operational Situation

5.1 Newly installed boiler

(1) Record of continuous operation

This plant started commercial operation in August 2009, and continued to be operated stably after its first scheduled shut down in March 2010. It was operated continuously for eight months before the first scheduled check, including the test operation period, and for about one year after the first scheduled shut down. It was operated under the loads/outputs specified below in **Table 4**, responding to the demands from the existing process plant.

Table 4 Operational situation in FY 2009/10

	FY 2009	FY 2010
Boiler load	220–370 t/h	280–370 t/h
Generator output	25–45 MW	35–46 MW

The differential pressure of each of equipment, which indicates operational stability, has remained initial level without significant increasing, excluding the electrostatic precipitator with its inlet duct. Although gradual increasing in the differential pressure have been observed in the electrostatic precipitator, including the duct at the inlet, the increasing have been within a range that does not comprise a major obstacle to achieve continuous operation for one year.

(2) Results of the annual inspection

The results of the first annual inspection performed in March 2010 are described below.

(i) Inside the furnace

Several centimeters of scales that fell from the upper tubes had piled up at the bottom of the furnace. The water walls were in good condition, with slight adhesion of ash over the entire surface. **Figure 5** shows the ash adhered to the superheater and the economizer; they were nearly free of ash adhesion and clogging of fins. Meanwhile, a decrease in thickness, which could be attributable to corrosion due to high-temperature sulfurization, was observed in the cap at the tip of the burner gun over a short period after the start of operation. The reduction in thickness of this element, which requires periodical inspection and replacement in original design, was found to be controlled by relocating the position of the tip of the burner gun.

(ii) De-NOx system

The catalysts were in good condition, with no deformation or abnormality in any of the four-layer catalysts. Adhesion of acidic ammonium sulfate was observed on some areas of the ammonia injection nozzle, but the ammonia gas flow was not blocked.

(iii) Electrostatic precipitator

Adhesion of hard scales on the collecting electrode and adhesion of ash on the discharging electrode were observed. The ammonia injection pipe was partially blocked by ammonium sulfate ash. The adhesion of dust and increase in differential pressure were reduced by increasing the frequency of hammering of the ammonia injection pipe after a restart.

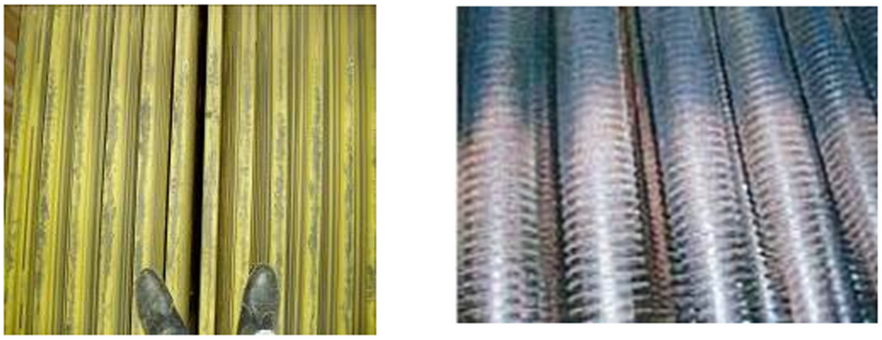

Superheater　　Economizer

Figure 5　Original superheater and economizer

5.2 Equipment with a modified boiler

(1)　Operation results

Commercial operation of this equipment started in July 2009. A temporary maintenance was performed in October 2009, and then a scheduled shutdown was implemented in May 2010. The shutdown was scheduled to be on the safe side because faulty charging caused by hard scales falling and adhering to the collecting electrode of the electrostatic precipitator was often detected in the first chamber, although it was anticipated that the equipment could have been operated using only the remaining second and third chambers until October 2010, when the first periodic maintenance after the modification was scheduled.

It is estimated that the hard scales were generated partly because O_2 in the flue gas was reduced to save energy after the temporary maintenance. After the scheduled shutdown, the O_2 in the flue gas was returned to the original amount and the hardness of the ash adhering to the collecting electrode was reduced. With this change, one year of continuous operation is expected.

The boiler is currently being operated at an average load of approximate 350 t/h.

(2)　Conditions during the first periodic maintenance after the modification

The findings during the first periodic maintenance, which was performed in October 2010, are summarized below.

(i)　Stains on pressurized areas

The amounts of ash adhered to the furnace evaporator tube, secondary evaporator tube, and tertiary superheater were less than the amounts before the modification. Therefore, a cleaning for the tubes was not performed. Almost no blocking was observed in the initial superheater and the economizer, and cleaning was not performed. **Figure 6** shows the ash adhesion to the bottom area of the secondary superheater and the top area of the economizer.

(ii)　De-NOx system

Only slight ash adhesion was observed.

(iii)　Electrostatic precipitator

Ash adhesion was observed on the collecting and discharging electrodes, but adhesion of hard scales on the collecting electrode, described above, was not observed.

Bottom area of the secondary superheater　　Top area of the economizer

Figure 6　Modified superheater and economizer

6. Future Prospects

(1) In Europe, where restriction on the use of heavy oil C (Bunker C) in ships will soon be implemented, introduction of advanced decomposition facilities, including SDA systems, has been considered, while various technologies for the effective use of residual oil discharged from the equipment are being studied.

(2) Compared with the technology for gasification of SDA pitch for use as fuel in an integrated gasification combined cycle (IGCC) and the technology for producing solid fuel from residual oil in a delayed coker, the proposed technology for utilization of SDA pitch as liquid fuel without transformation, which was demonstrated by this plant, is characterized by a simple system and is the best solution featuring high cost performance. This technology requires less processing costs and has less environmental impact compared with technologies that handle residual oil as industrial waste, realizing a greater contribution to society.

(3) Other refineries and licensors of upstream equipment have shown great interests in our results. We expect that the introduction of equipment consisting of SDA pitch-fired boiler plants will be accelerated for effective use of residual oil, responding to the introduction and extension of systems for upgrading refineries.

7. Conclusion

(1) SDA pitch was formerly believed to be inappropriate for use as boiler fuel because of its high viscosity and high environmental load. However, the SDA pitch was used in actual boiler plants, and the results of continuous one-year operations were obtained.

(2) To realize the projects, the latest combustion and environmental technologies were adopted, along with technologies for continuous operation. The validity of these technologies was demonstrated.

(3) An increasing number of residual oil cracking systems will be introduced in the future, and effective utilization of SDA pitch, a by-product generated from residual oil cracking systems, will be major concerns for oil refineries. The technology introduced here for utilizing SDA pitch as fuel in a boiler plant offers the best solution and is superior to other technologies.

(4) Based on the findings obtained through this projects, we will continue to strive to provide even more reliable and economical system.

In closing, we would like to express our gratitude to Asahi Chemicals Corporation, Zeon Corporation, Mitsubishi Chemical Corporation, and JX Nippon Oil and Energy Corporation for their cooperation in publishing this report.

References

1. Fujimura K. et al., Development and Operation Results of VR Firing Boiler, Mitsubishi Juko Gioh Vol. 36 No. 2 (1999) pp.96-99
2. Investigation report (2) for the effective treatment of oil residue for the oil refining industry (the bottom-less solutions for the refineries) (in Japanese), Japan Petroleum Energy Center (JPEC), (March, 2006)
3. Construction and Operation Results of SDA Pitch Firing Boiler, The Thermal and Nuclear Power Generation Convention 2010 Tokyo, CD-R (2010) pp. 52-58