Development of Automatic Steering & Battery Powered Automated People Mover

HIROSHI OGAWA*1 MITSUAKI HOSHI*1
MASAHIRO YAMAGUCHI*2 HIROYUKI KONO*2
KATSUAKI MORITA*2 MASAYA MITAKE*2

In today's world where environmental problems draw great attention, guideway transportation systems are popular because of their environmentally friendly features. Introducing an actuator-driven automatic steering mechanism simplifies the guiding system which is laid on the guideway. In addition, by fitting a battery system to the vehicle, we can eliminate the power rail supplying electric power, realizing a compact guideway, and reducing the construction costs. Further, the kinetic energy of the vehicles can efficiently recharge the batteries. Mitsubishi Heavy Industries, Ltd. (MHI) has developed this automatic steering and battery powered APM (automated people mover) to realize a ground transportation system which can satisfy society's needs.

1. Introduction

New transportation systems have been increasingly introduced in various parts of the world. MHI has also been developing safe and comfortable ground transportation systems such as the APM (automated people mover) which is a new, rubber tire transportation system, the steel wheel LRT (light rail transit), monorail systems, and Skyrail systems. Further, as environmental issues are increasingly a global concern, there is a bigger demand for new energy-saving transportation systems which are compact and environmentally friendly. Accordingly, MHI has developed an automatic steering, battery powered APM by adopting a new concept to satisfy our customers' needs. The automatic steering system, by using an actuator steering mechanism, simplifies the guidance system which is laid on the guideway. Also, as a battery system is installed on the vehicle, it eliminates the power rail which supplies electric power, contributing to a compact guideway configuration. It also reduces construction costs and shortens the construction period. Further, from the standpoint of energy saving, the kinetic energy can be efficiently recharged to the battery during braking. This paper outlines the concept of the new system and the results of the practical running performance of a test vehicle.

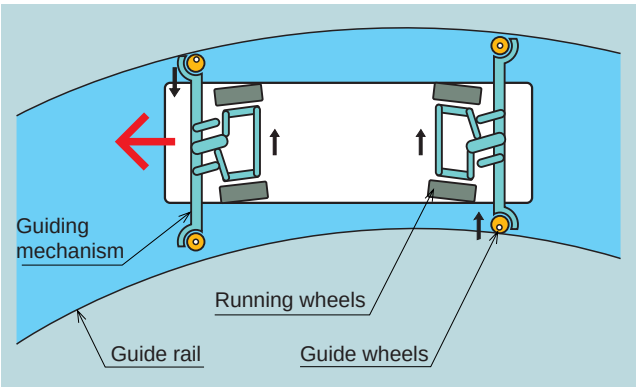

Fig. 1 Side guided system

2. Conventional system

2.1 Guiding system

A conventional APM uses the typical side guided system shown in **Fig. 1**. The four-wheel steering running wheels and the guiding devices fitted with guide wheels on both sides are located at the front and rear of the vehicle, and are mechanically connected via a link mechanism. When the vehicle starts to move, the guide wheels come in contact with the guide rails on both sides of the guideway, generating a reaction force which steers the running wheels and guides the vehicle along the guide rails.

Also, as both the front and rear wheels of the vehicle need to run on the same trajectory, the front and rear wheels are steered in opposite directions. In order to achieve this mechanism a steering reverser is installed between the guiding device and the axle steering arms.

2.2 Electric power supply system

As for electric power supply, power rails are laid along the guideway and the vehicle receives electric power by the pantograph on the vehicle being in constant contact with the power rail.

As explained above, in the conventional system the guide rails and power rails are laid on either side of the guideway throughout the whole line. Therefore, as the cross-sectional area of the track becomes larger and a longer construction period is required to lay the guide rails and power rails.

*1 Plant and Transportation Systems Engineering & Construction Center
*2 Hiroshima Research & Development Center, Technical Headquarters

3. Concept of Automatic Steering & Battery Powered APM

Figure 2 shows a comparison of the conventional APM and the new system. As the new system can eliminate the guide rails and power rails, the track becomes narrower in width, and the structure becomes simplified.

3.1 Automatic steering system

The automatic steering system determines the running pattern of the guideway from the real time vehicle position, alignment database and operational data, and uses them to control the steering of the vehicle. An active control type four-wheel steering system using an actuator is adopted for steering. The steering of each vehicle is controlled so that the front and rear wheels run on the same trajectory on the guideway, making the system suitable for single vehicles and also for multi-vehicle combinations.

The automatic steering system consists of an automatic steering control device, an actuator, and rods which transmit the actuator movement to the running wheels, and neither a guiding device or a steering reverser are required. This contributes to the weight reduction of the bogie. This does not involve any revisions to the suspension mechanism, the axle and the running wheels, which have a long-proven record in the conventional APM.

In addition, the backup-wheel mechanism shown in **Fig. 3** is used as a fail-safe backup system. The backup-wheel mechanism comprises of a backup-wheel guide on the running track and a backup-wheel device for the vehicle, where the guide width is determined to ensure a specified clearance between the backup-wheels and the backup-wheel guide.

Therefore, in the normal condition, the backup-wheels move in conjunction with the steering mechanism of the running wheels without touching the guide. In the event of a control failure, the backup-wheels can guide the vehicle along the backup-wheel guide, which serves as a fail-safe system.

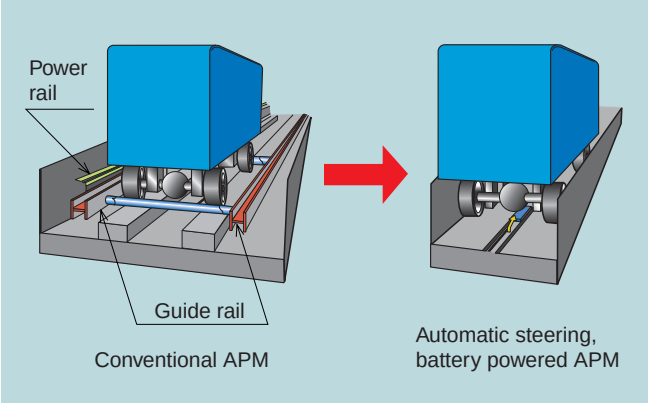

Fig. 2 Conventional APM and automatic steering, battery powered APM

3.2 Concept of battery system

The battery system eliminates the conventional power supply from power rails, and the vehicle is driven by batteries mounted on the vehicle. During braking, the kinetic energy is efficiently recharged back to the battery. As an APM is restricted in terms of vehicle space and weight, the use of high-performance batteries is required. The battery system needs to have at least enough energy capacity to cover the distance between two stations and the energy consumed during traveling needs to be quickly re-charged while stopped at the station. In consideration of these requirements, high performance, high output lithium ion secondary batteries which realize high acceleration and high speed running have been adopted.

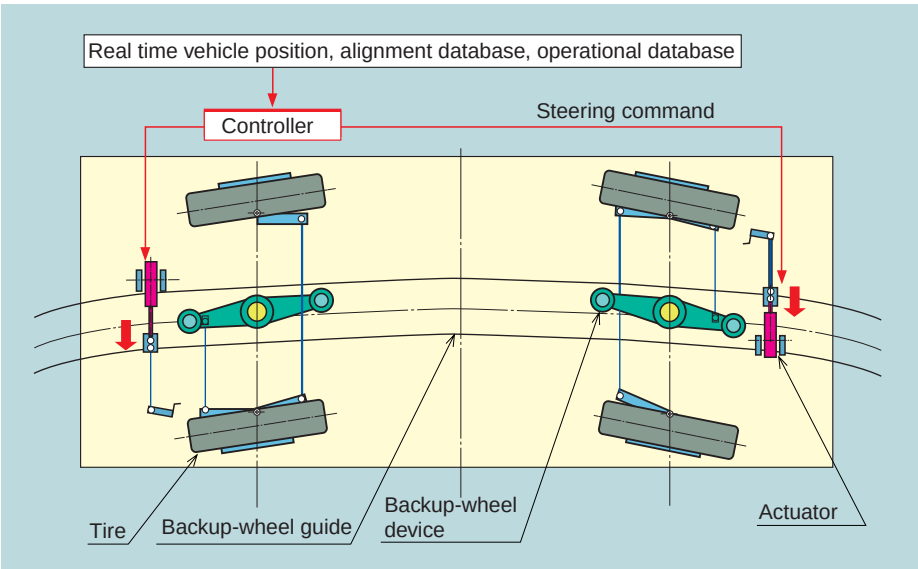

Fig. 3 Configuration of automatic steering system

4. Vehicle testing

In order to use it as a test vehicle (the photograph on page 1), MHI's existing experimental vehicle was equipped with the automatic steering and battery systems described above.

Figure 4 shows an actual test conducted on the test line at our Plant and Transportation Systems Engineering & Construction Center (Mihara).

4.1 Automatic steering system

The vehicle is equipped with the actuator, controller, and fail-safe system necessary for the automatic steering system, while the backup-wheel guide is built into the guideway. The fail-safe system is a backup mechanism, and works in conjunction with the running wheels steering mechanism so that the backup-wheels do not touch the guide under normal conditions.

4.2 Battery system

Figure 5 shows the configuration of the battery system. Lithium ion secondary batteries are mounted under the vehicle floor and are connected to the main vehicle circuit. The batteries, in order to cope with the conditions under the floor, such as rain and direct sunlight, are structured to have good waterproof properties. The system is also equipped with a fan cooling device to prevent temperature rises. Due to vehicle space restrictions, particular consideration was given to the on board design so that the batteries could be mounted compactly under the floor. In system operation, in order to prevent over-charging or over-discharging, the voltage is adjusted so that the battery charging condition is held within a specified range and the current does not exceed the allowable limits of the batteries.

5. Test Results

The running tests were conducted on our test line combining straight and curved sections, where the automatic steering, battery power system achieved practical speeds over the line. All tests were conducted by using batteries as the power source, during which no trouble was reported.

Some examples from the tests results are illustrated as follows. **Figure 6** shows photos of the backup-wheels taken during a high speed run along a straight line.

Fig. 4 Test scene

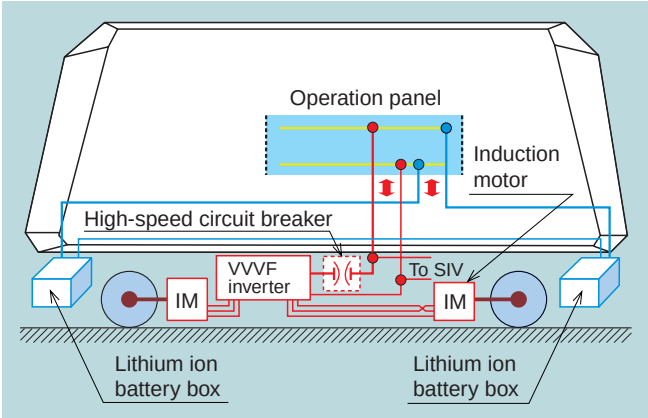

Fig. 5 Configuration of battery system

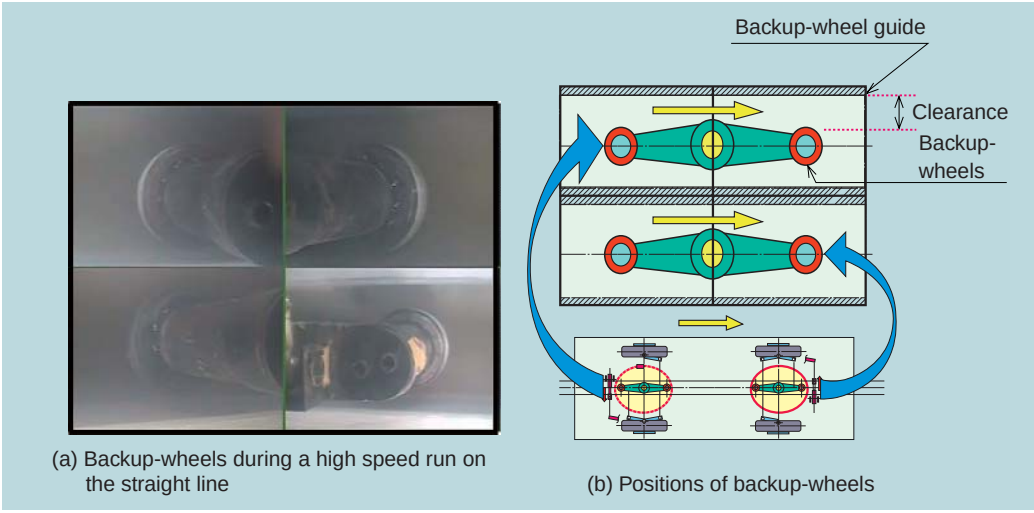

Fig. 6 (a) Backup-wheels during a high speed run on the straight line (b) Positions of backup-wheels

Fig. 7 Backup-wheels along small curve

Figure 7 shows the behavior of the front backup-wheels during a run on a small curved line. **Figure 8** shows an outside view taken from the vehicle during a run on the small curved line. It was verified that the vehicle was steered along the curved guideway also on the curved section and the backup-wheels did not touch the backup-wheel guide.

6. Conclusion

Based on the concept of an environmentally friendly APM which is compact and easy to construct, MHI has worked on the development of a new, energy-saving transportation system with a compact guideway which is unique and innovative. The automatic steering, battery powered APM is an unsurpassed urban transportation system which meets the above concept. MHI has completed internal running tests at the practical operational level and is expecting the earliest possible delivery of this system to our customers.

We would like to express our sincere gratitude to all parties concerned for their guidance and cooperation extended to us in the course of the development of this automatic steering, battery powered APM.

Fig. 8 Outside view taken from vehicle during along run small curve


Hiroshi Ogawa


Mitsuaki Hoshi


Masahiro Yamaguchi


Hiroyuki Kono


Katsuaki Morita


Masaya Mitake