RTA84C-UG

Main data:

Cylinder bore	840 mm
Poston stroke	2400 mm
Speed	82 - 102 rpm
Mean effective pressure at P1	
Piston speed	

Rated power: Propulsion Engines								
cyl.	Output in kW/bhp at							
	102 rpm				82 rpm			
	P1		P2		P3		P4	
	kW	bhp	kW	bhp	kW	bhp	kW	bhp
4	16,200	22,040	11,360	15,440	13,000	17,680	11,360	15,440
5	20,250	27,550	14,200	19,300	16,250	22,100	14,200	19,300
6	24,300	33,060	17,040	23,160	19,500	26,520	17,040	23,160
7	28,350	38,570	19,880	27,020	22,750	30,940	19,880	27,020
8	32,400	44,080	22,720	30,880	26,000	35,360	22,720	30,880
9	36,450	49,590	25,560	34,740	29,250	39,780	25,560	34,740
10	40,500	55,100	28,400	38,600	32,500	44,200	28,400	38,600
11	44,550	60,610	31,240	42,460	35,750	48,620	31,240	42,460
12	48,600	66,120	34,080	46,320	39,000	53,040	34,080	46,320

Brake specific fuel consumption (BSFC)								
	g/kWh	g/bhph	g/kWh	g/bhph	g/kWh	g/bhph	g/kWh	g/bhph
Load 100%								
BMEP, bar								
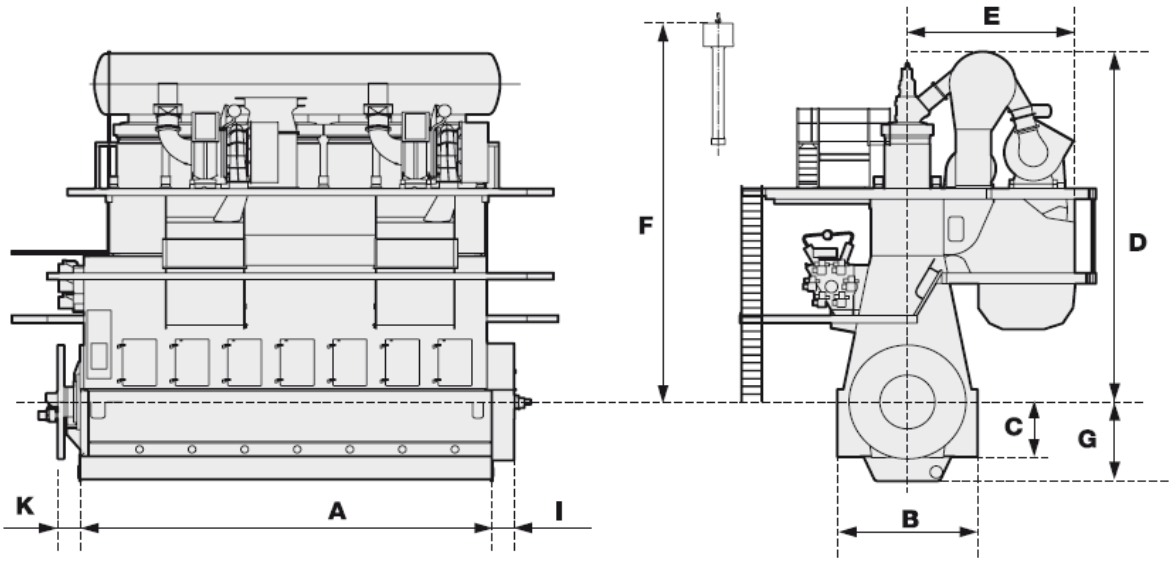
Principal engine dimensions (mm) and weights (tonnes)										
Cyl.	A	B	C	D	E	F*	G	I	K	Weight
4		4,320		11,315		13,130	2,205			630
5		4,320		11,315		13,130	2,205			740
6		4,320		11,315		13,130	2,205			850
7		4,320		11,315		13,130	2,205			960
8		4,320		11,315		13,130	2,205			1,110
9		4,320		11,315		13,130	2,205			1,230
10		4,320		11,315		13,130	2,205			1,350
11		4,320		11,315		13,130	2,205			1,460
12		4,320		11,315		13,130	2,205			1,570